FIG 1

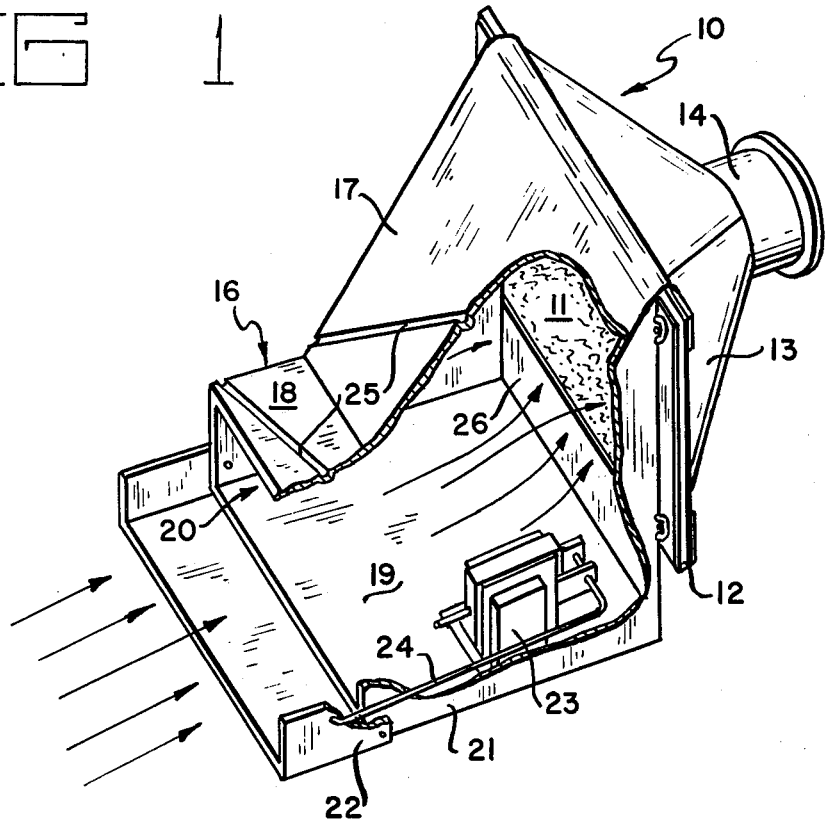
10
14
17
16
11
13
18
25
26
20
19
12
24
23
21
22

FIG 2

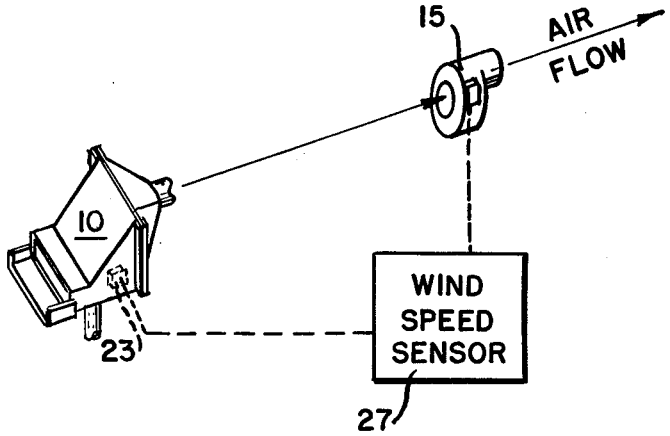
15
AIR
FLOW
10
WIND
SPEED
SENSOR
23
27