US008758435B2

(12) **United States Patent**
**Doraiswamy et al.**

(10) **Patent No.: US 8,758,435 B2**
(45) **Date of Patent: *Jun. 24, 2014**

(54) **INTRAOCULAR LENS**

(75) Inventors: **Anand Doraiswamy**, Goleta, CA (US); **Jensen Buck**, Goleta, CA (US); **Daniel Hamilton**, Napa, CA (US)

(73) Assignee: **Santen Pharmaceutical Co., Ltd.**, Osaka (JP)

( * ) Notice: Subject to any disclaimer, the term of this patent is extended or adjusted under 35 U.S.C. 154(b) by 51 days.

This patent is subject to a terminal disclaimer.

(21) Appl. No.: **12/955,654**

(22) Filed: **Nov. 29, 2010**

(65) **Prior Publication Data**

US 2012/0130488 A1 May 24, 2012

**Related U.S. Application Data**

(63) Continuation of application No. 12/954,424, filed on Nov. 24, 2010.

(51) **Int. Cl.**
*A61F 2/16* (2006.01)

(52) **U.S. Cl.**
USPC ..... **623/6.43**; 623/6.37; 623/6.46; 623/6.49

(58) **Field of Classification Search**
USPC ..... 623/6.38–6.55, 6.16–6.17
See application file for complete search history.

(56) **References Cited**

U.S. PATENT DOCUMENTS

| | | | | |
|---|---|---|---|---|
| 4,254,509 | A * | 3/1981 | Tennant | 623/6.37 |
| 4,402,579 | A * | 9/1983 | Poler | 351/159.02 |
| 4,806,382 | A | 2/1989 | Goldberg et al. | |
| 4,813,956 | A | 3/1989 | Gupta | |
| 4,923,468 | A | 5/1990 | Wild | |
| 4,969,897 | A | 11/1990 | Kalb | |
| 5,049,156 | A | 9/1991 | Higashi et al. | |
| 5,476,514 | A * | 12/1995 | Cumming | 623/6.37 |
| 5,716,403 | A | 2/1998 | Tran et al. | |
| 6,179,870 | B1 | 1/2001 | Sourdille et al. | |
| 6,197,059 | B1 * | 3/2001 | Cumming | 623/6.39 |
| D685,477 | S | 7/2013 | Doraiswamy et al. | |
| D688,800 | S | 8/2013 | Doraiswamy et al. | |
| D688,801 | S | 8/2013 | Doraiswamy et al. | |
| D689,611 | S | 9/2013 | Doraiswamy et al. | |
| D691,273 | S | 10/2013 | Doraiswamy et al. | |
| 2002/0107568 | A1 * | 8/2002 | Zadno-Azizi et al. | 623/6.37 |
| 2003/0204257 | A1 | 10/2003 | Southard | |
| 2005/0015143 | A1 | 1/2005 | Willis et al. | |

(Continued)

FOREIGN PATENT DOCUMENTS

| | | |
|---|---|---|
| EP | 0 438 043 | 7/1991 |
| EP | 1457170 A1 | 9/2004 |
| WO | WO/2005/055875 A2 | 6/2005 |

OTHER PUBLICATIONS

Invitation to Pay Additional Fees, including Partial Int'l Search, for Int'l Application No. PCT/US2011/058971, Jan. 27, 2012.

(Continued)

*Primary Examiner* — Paul Prebilic
(74) *Attorney, Agent, or Firm* — Squire Sanders (US) LLP

(57) **ABSTRACT**

An intraocular lens comprises an optic and at least two haptics. Each haptic is offset in an anterior direction from a central optic plane of the optic. The offset allows for predictable posterior vaulting upon implantation.
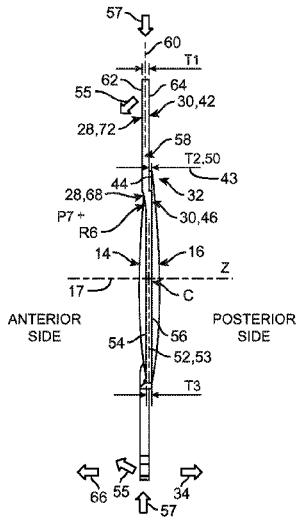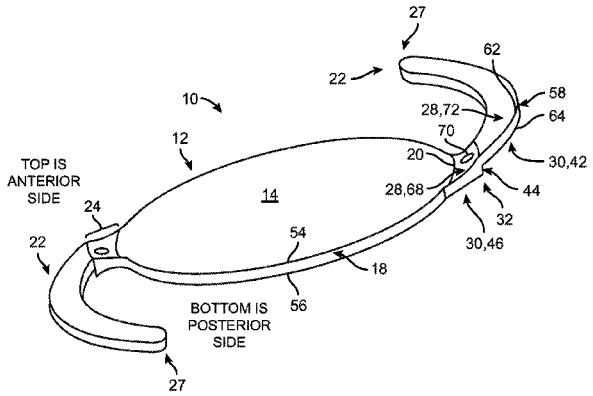
**16 Claims, 5 Drawing Sheets**