US005354335A

United States Patent [19]

Lipshitz et al.

[11] Patent Number: 5,354,335

[45] Date of Patent: Oct. 11, 1994

[54] INTRAOCULAR INSERT FOR IMPLANTATION IN THE HUMAN EYE

[76] Inventors: **Isaac Lipshitz**, 89A Hanassi Street, 46 399 Herzlia; **Joseph Gross**, 73 160 Moshav Mazor, both of Israel

[21] Appl. No.: **13,387**

[22] Filed: **Feb. 4, 1993**

[51] **Int. Cl.**[5] **A61F 2/16**

[52] **U.S. Cl.** ..... **623/6**; 351/158; 351/160 R

[58] **Field of Search** ..... 623/6; 351/158, 160 R

[56] **References Cited**

U.S. PATENT DOCUMENTS

4,666,446	5/1987	Koziol et al.	623/6
4,955,902	9/1990	Kelman	623/6
5,030,231	7/1991	Portney	623/6
5,044,743	9/1991	Ting	623/6 X
5,074,875	12/1991	Donn et al.	623/6
5,196,028	3/1993	Portney et al.	623/6
5,275,623	1/1994	Sarfarazi	623/6

Primary Examiner—Randall L. Green
Assistant Examiner—Mary Beth O. Jones
Attorney, Agent, or Firm—Benjamin J. Barish

[57] **ABSTRACT**

An intraocular insert for implantation in the interior of a human eye, characterized in that the insert includes a converging lens to face the anterior side of the eye, and a diverging lens in alignment with and spaced behind the converging lens to face the posterior side of the eye.
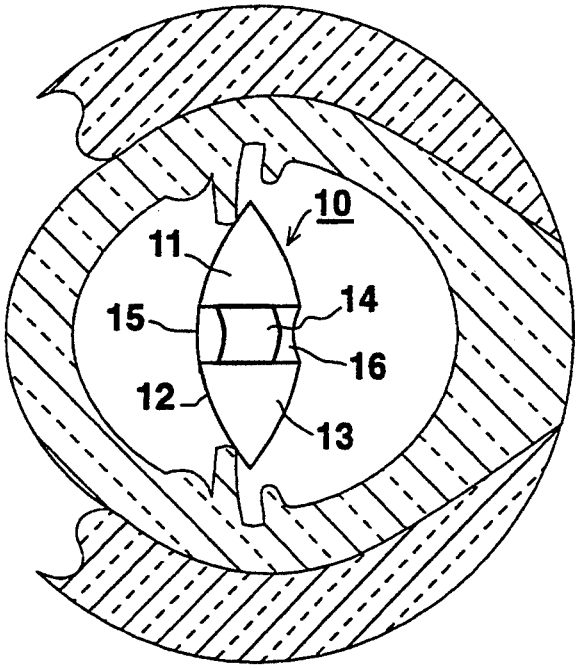
20 Claims, 1 Drawing Sheet