US006050735A

United States Patent [19]

Hazzard

[11] **Patent Number: 6,050,735**

[45] **Date of Patent: Apr. 18, 2000**

[54] **WRITING IMPLEMENT INCLUDING AN INPUT STYLUS**

[75] Inventor: **Thomas B. Hazzard**, Providence, R.I.

[73] Assignee: **Ttools, LLC**, Providence, R.I.

[21] Appl. No.: **09/335,833**

[22] Filed: **Jun. 18, 1999**

Related U.S. Application Data

[63] Continuation-in-part of application No. 09/074,244, May 7, 1998, Pat. No. 5,913,629.

[51] **Int. Cl.**[7] **B43K 29/00**; B43K 24/08

[52] **U.S. Cl.** **401/33**; 178/19.01; 178/19.03; 178/19.05; 345/179; 401/34; 401/37; 401/52; 401/109; 401/195

[58] **Field of Search** 401/29, 31–34, 401/37, 52, 99, 110–114, 258, 109; 345/179, 182; 178/19.01, 19.03, 19.04, 19.05; D19/35, 41, 51, 54; 33/41.6

[56] **References Cited**

U.S. PATENT DOCUMENTS

14,306	2/1856	Cross	401/31 X
210,256	11/1878	Hoffman	33/41.6
D. 390,872	2/1998	Sunaga .	
1,902,865	3/1933	Koester	33/41.6
2,519,502	8/1950	Rem	401/31
3,479,742	11/1969	Starkenberg	401/195 X
4,203,682	5/1980	Hepworth .	
4,667,182	5/1987	Murphy .	
5,142,161	8/1992	Brackmann	401/52 X
5,203,638	4/1993	Redmond, Jr.	401/35 X
5,534,671	7/1996	Gierut et al. .	
5,541,375	7/1996	Dam et al. .	
5,564,850	10/1996	Nagaoka	401/37
5,576,502	11/1996	Fukushima et al. .	
5,633,471	5/1997	Fukushima .	
5,635,682	6/1997	Cherdak et al. .	
5,707,307	1/1998	Robben et al.	401/31 X
5,850,059	12/1998	Yoshimura	178/19.01
5,864,098	1/1999	Shinohe	178/19.01

FOREIGN PATENT DOCUMENTS

359276	9/1920	Germany	401/32
655804	8/1951	United Kingdom	401/32

Primary Examiner—Steven O. Douglas
Assistant Examiner—Kathleen J. Prunner
Attorney, Agent, or Firm—Barlow, Josephs & Holmes, Ltd.

[57] **ABSTRACT**

A writing implement **(10)** includes an integrally formed stylus tip **(12)** for inputting information into electronic devices. An ink cartridge style pen **(10)** with a push-button spring actuator **(48)** is modified to include an integrally formed stylus tip **(12)** molded into the writing end of the pen. When the ink cartridge **(30)** is retracted, the stylus tip **(12)** is available for use. However, when the ink cartridge **(30)** is extended, it extends beyond the stylus tip **(12)** for engagement with paper writing media. The pen **(10)** allows the operator to quickly and easily switch between writing with an ink tip cartridge **(30)** to input information with the stylus tip **(12)** without significant manipulation of the pen.
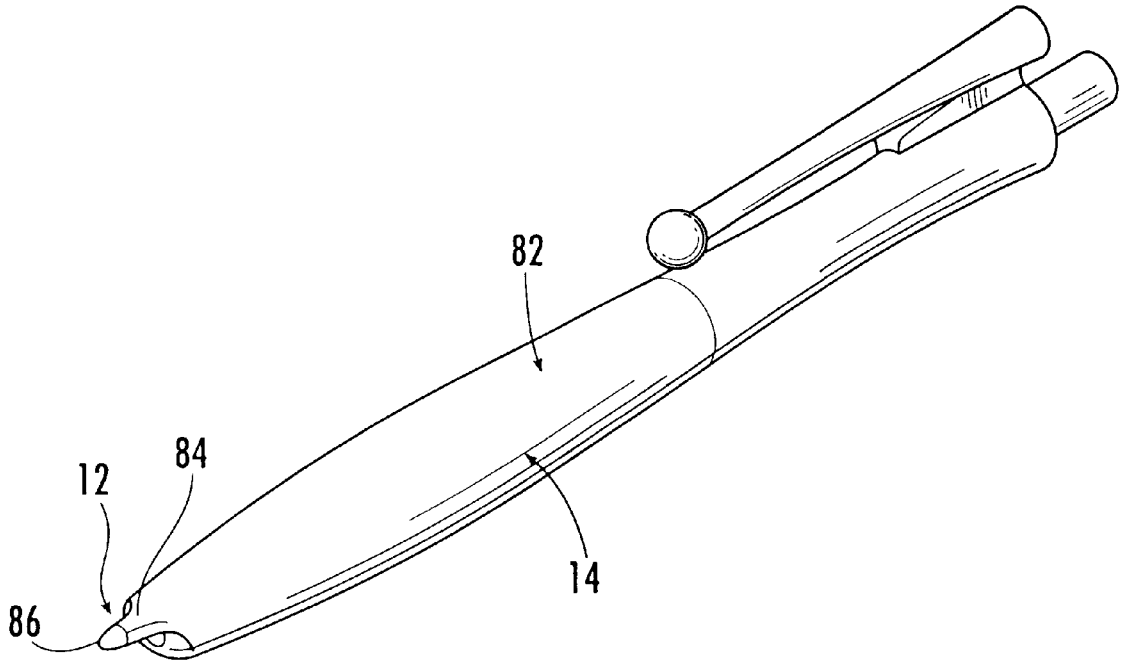
16 Claims, 5 Drawing Sheets