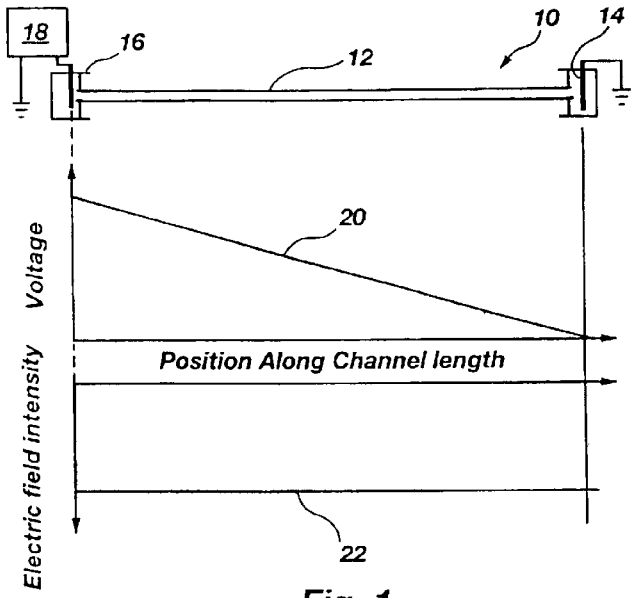

Fig. 1
(PRIOR ART)

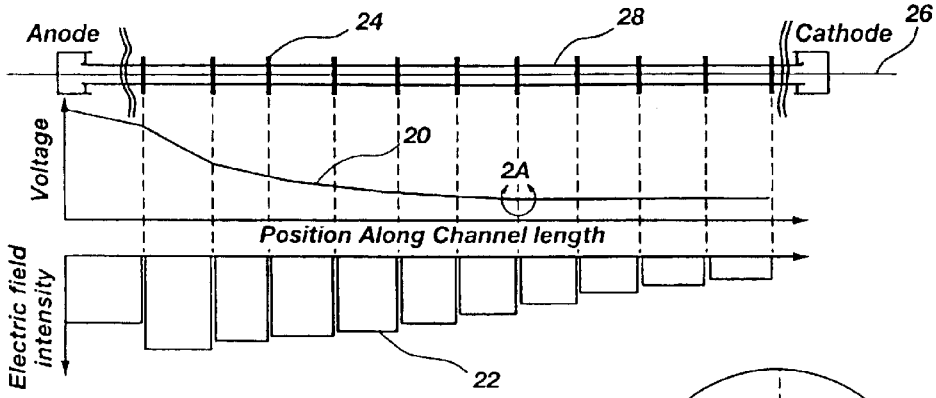

Fig. 2
(PRIOR ART)

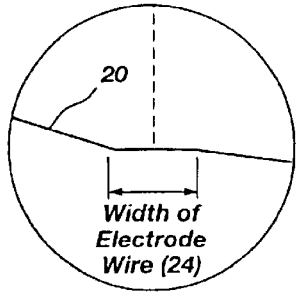

Fig. 2A
(PRIOR ART)