US005346735A

United States Patent [19]

Logan et al.

[11] Patent Number: 5,346,735

[45] Date of Patent: Sep. 13, 1994

[54] **PEELABLE BARRIER FILM FOR VACUUM SKIN PACKAGES AND THE LIKE**

[75] Inventors: **Robin H. Logan**, Moore; **Solomon Bekele**, Taylors; **Henry W. Stockley, III**, Spartanburg; **Gloria G. Toney**, Greer, all of S.C.

[73] Assignee: **W. R. Grace & Co.-Conn**, Duncan, S.C.

[21] Appl. No.: **930,882**

[22] Filed: **Aug. 14, 1992**

[51] **Int. Cl.**[5] **B32B 1/08**

[52] **U.S. Cl.** **428/36.7**; 428/36.6; 428/35.4; 428/349; 428/516; 428/476.1; 426/127

[58] **Field of Search** 428/36.6, 36.7, 35.4, 428/349, 476.1, 516

[56] **References Cited**

U.S. PATENT DOCUMENTS

Re. 30,009	5/1979	Perdue et al.	53/433
3,491,504	1/1970	Young et al.	53/22
3,574,642	4/1971	Weinke	99/174
3,681,092	8/1972	Titchenal et al.	99/174
3,713,849	1/1973	Grindrod et al.	99/174
4,055,672	10/1977	Hirsch et al.	426/127
4,287,151	9/1981	Esakov et al.	264/560
4,638,913	1/1987	Howe, Jr.	206/632
4,886,690	12/1989	Davis et al.	428/36
4,889,731	12/1989	Williams, Jr.	426/106
4,952,628	8/1990	Blatz	525/58
4,956,212	9/1990	Bekele	428/36
4,977,004	12/1990	Bettle, III et al.	428/36.7
5,075,143	12/1991	Bekele	428/36.6
5,106,688	4/1992	Bradfute et al.	428/215

FOREIGN PATENT DOCUMENTS

245774	7/1963	Australia .
1258357	3/1961	France .
1286018	1/1962	France .

Primary Examiner—James J. Seidleck
Assistant Examiner—M. L. Warzel
Attorney, Agent, or Firm—William D. Lee, Jr.; Mark B. Quatt; George Legg

[57] **ABSTRACT**

A vacuum skin package for packaging fresh red meat and like articles is produced by using a composite, multilayer, oxygen barrier, vacuum skin packaging forming film in which the impermeable film can be manually separated from the non-barrier, oxygen permeable film. After the vacuum skin package is formed to enclose a fresh red meat product in a vacuum the meat will have a purplish color. Then, after storage, the impermeable film can be removed so that the remaining permeable film can admit oxygen to impart the desirable red bloom to the fresh meat. The oxygen permeable film preferably includes a core having enhanced permeation properties. The impermeable film preferably includes an EVOH layer sandwiched between ionomer layers for improved barrier properties.
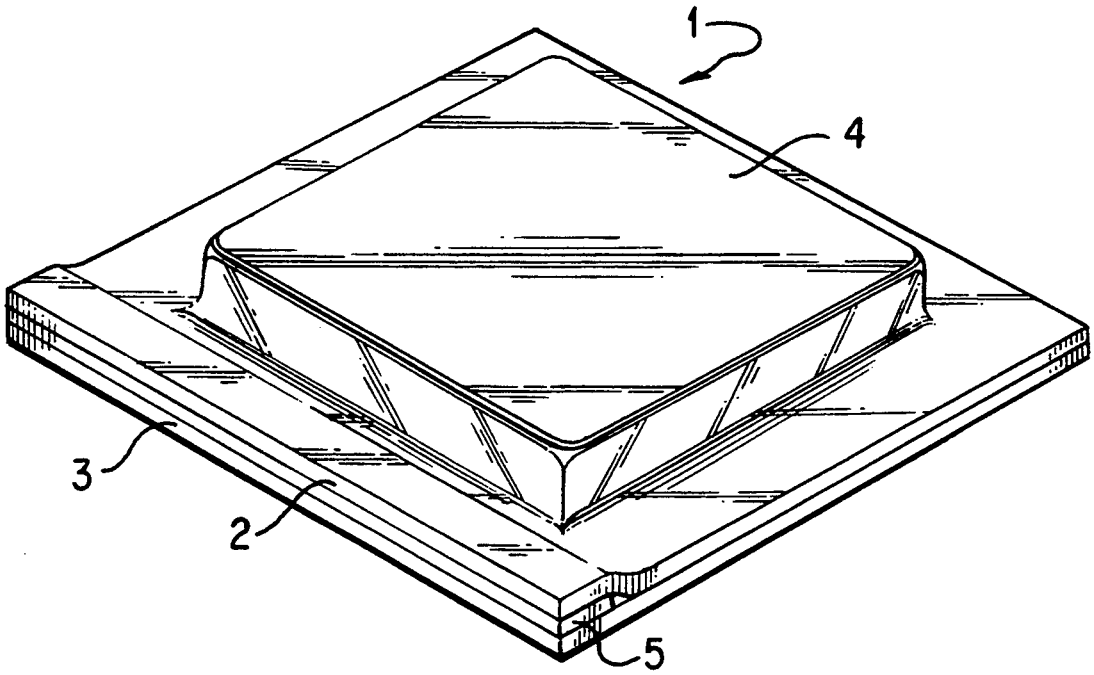
12 Claims, 2 Drawing Sheets