Fig. 1

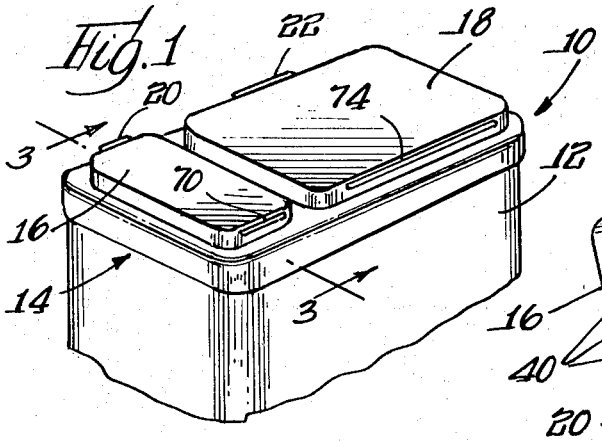

Fig. 2.

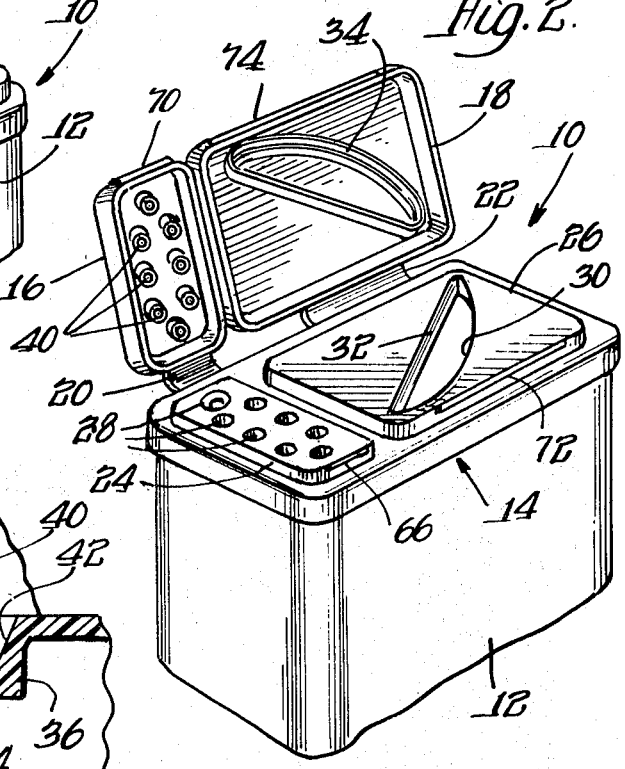

Fig. 4.

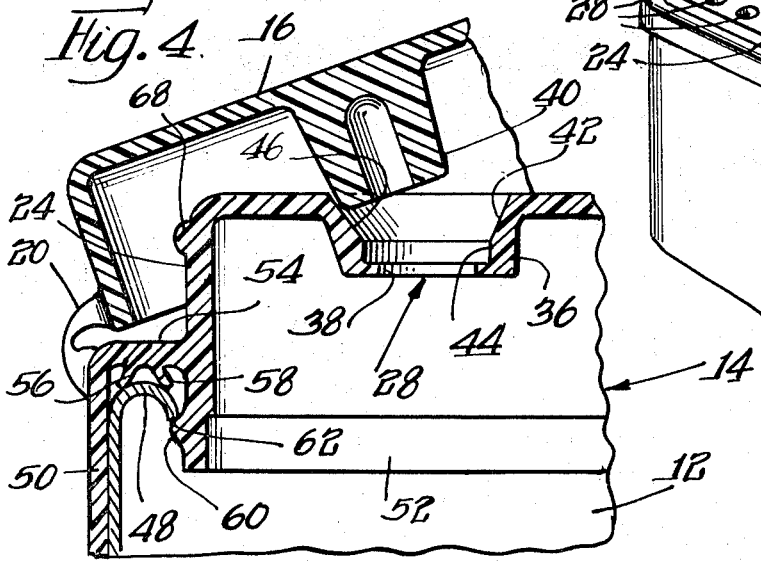

Fig. 3.

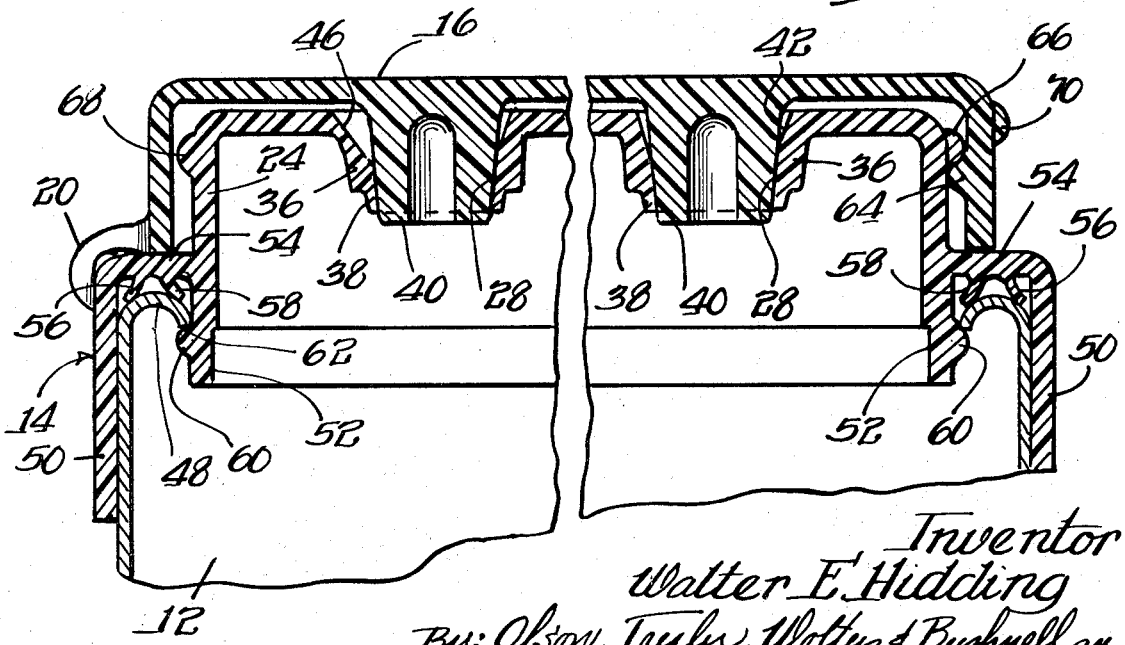

Inventor
Walter E. Hidding
By: Olson, Trexler, Wolters & Bushnell Attys