US007239135B2

(12) **United States Patent**
Abbink et al.

(10) **Patent No.: US 7,239,135 B2**
(45) **Date of Patent: Jul. 3, 2007**

(54) **NMR GYROSCOPE**

(75) Inventors: **Henry C. Abbink**, Westlake Village, CA (US); **Edward Kanegsberg**, Pacific Palisades, CA (US); **Ralph A. Patterson**, Moorpark, CA (US)

(73) Assignee: **Northrop Grumman Corporation**, Los Angeles, CA (US)

(*) Notice: Subject to any disclaimer, the term of this patent is extended or adjusted under 35 U.S.C. 154(b) by 0 days.

(21) Appl. No.: **11/312,311**

(22) Filed: **Dec. 20, 2005**

(65) **Prior Publication Data**

US 2006/0139029 A1 Jun. 29, 2006

(51) **Int. Cl.**
G01V 3/00 (2006.01)

(52) **U.S. Cl.** **324/304**; 324/302

(58) **Field of Classification Search** 324/304, 324/302, 301

See application file for complete search history.

(56) **References Cited**

U.S. PATENT DOCUMENTS

2,841,760 A * 7/1958 Hansen, Jr. 324/300
3,103,620 A * 9/1963 Fraser 324/302
4,157,495 A 6/1979 Grover
4,450,407 A * 5/1984 Kwon et al. 324/304
4,509,014 A * 4/1985 Karwacki et al. 324/305
5,469,256 A * 11/1995 Hall et al. 356/467

OTHER PUBLICATIONS

Knappe S et al; A Microfabricated Atomic Clock; Applied Physics Letters; Aug. 30, 2004; pp. 1460-1462; vol. 85, No. 9; American Institute of Physics, Melville, New York, US.

* cited by examiner

Primary Examiner—Louis M. Arana
(74) *Attorney, Agent, or Firm*—Carmen B. Patti & Assoc. LLC

(57) **ABSTRACT**

An NMR gyroscope in one example comprises a support structure affixed within an enclosure, an NMR cell affixed to the support structure, a plurality of permanent magnets disposed about the NMR cell to produce a magnetic field within the cell, and a field coil disposed proximate the cell to produce a modulated magnetic field transverse to the magnetic field produced by the permanent magnets.
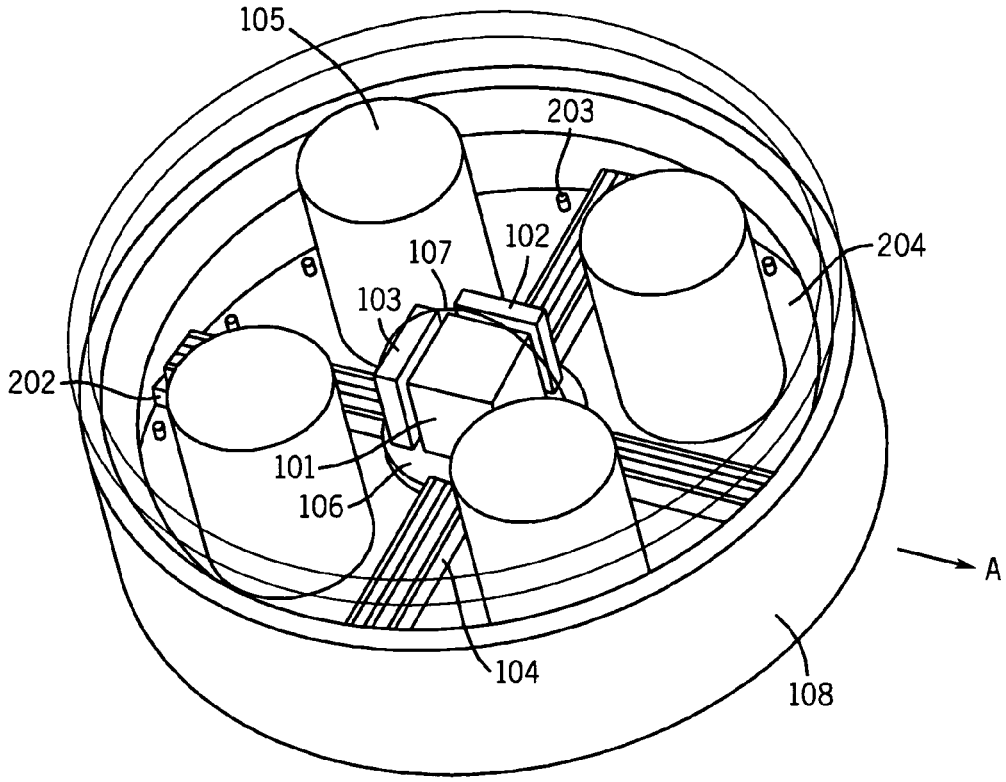
33 Claims, 4 Drawing Sheets