US009636835B2

(12) **United States Patent**
Buss

(10) **Patent No.: US 9,636,835 B2**
(45) **Date of Patent: May 2, 2017**

(54) **PUSH/PULL ROTARY CUTTING APPARATUS DRIVEN BY SUBSTRATE**

(71) Applicant: **Richard S. Buss**, Minnetrista, MN (US)

(72) Inventor: **Richard S. Buss**, Minnetrista, MN (US)

(*) Notice: Subject to any disclaimer, the term of this patent is extended or adjusted under 35 U.S.C. 154(b) by 476 days.

(21) Appl. No.: **13/858,066**

(22) Filed: **Apr. 7, 2013**

(65) **Prior Publication Data**

US 2013/0220094 A1 Aug. 29, 2013

Related U.S. Application Data

(63) Continuation of application No. 12/575,955, filed on Oct. 8, 2009, now abandoned.

(60) Provisional application No. 61/195,545, filed on Oct. 9, 2008.

(51) **Int. Cl.**

B26D 5/38	(2006.01)
B26D 1/22	(2006.01)
B26D 1/15	(2006.01)
B26D 5/20	(2006.01)

(52) **U.S. Cl.**

CPC ***B26D 5/38*** (2013.01); ***B26D 1/22*** (2013.01); *B26D 1/15* (2013.01); *B26D 5/20* (2013.01); *Y10T 83/6584* (2015.04); *Y10T 83/6592* (2015.04); *Y10T 83/727* (2015.04); *Y10T 83/7793* (2015.04); *Y10T 83/872* (2015.04); *Y10T 83/8745* (2015.04)

(58) **Field of Classification Search**

CPC ... B26D 1/22; B26D 5/20; B26D 5/38; B26D 1/14; B26D 1/157; B26D 1/575; B26D 1/16; B26D 1/18; B26D 1/225; B26D 1/45; B26D 1/15; Y10T 83/6584; Y10T 83/8745; Y10T 83/872; Y10T 83/6592; Y10T 83/7793

USPC 83/331, 332, 347, 505, 508.3, 498, 499, 83/504, 495, 561, 557

See application file for complete search history.

(56) **References Cited**

U.S. PATENT DOCUMENTS

235,163	A		12/1880	Marshall	
1,510,656	A		10/1924	Clements	
3,119,312	A	*	1/1964	Henc	83/333
3,274,874	A		9/1966	Treiber et al.	
3,274,876	A	*	9/1966	Debus	83/415
3,296,911	A	*	1/1967	McLane	83/408
3,522,754	A		8/1970	Sauer	
3,614,906	A	*	10/1971	Hall	3/505
3,677,122	A	*	7/1972	Rautine	83/506
3,685,379	A	*	8/1972	Frye	B26D 1/245 83/482
3,771,398	A		11/1973	Schaefer et al.	
3,823,633	A		7/1974	Ross	
3,958,051	A	*	5/1976	Smith	428/42.3
3,982,455	A	*	9/1976	Bowman	83/105
4,003,276	A		1/1977	Schmitt	

(Continued)

Primary Examiner — Jennifer Swinney

(57) **ABSTRACT**

An apparatus for cutting fiberglass insulation batting with a rotary blade where an elongate section of fiberglass insulation batting is manually pushed into an inlet of the apparatus whereupon the blade bites into the fiberglass insulation batting and whereupon the elongate now split section of fiberglass insulation batting begins to protrude from the outlet of the apparatus, whereupon the protruding sections of fiberglass insulation batting are manually grabbed and pulled through the apparatus further driving the rotary blade and further cutting the fiberglass insulation batting.
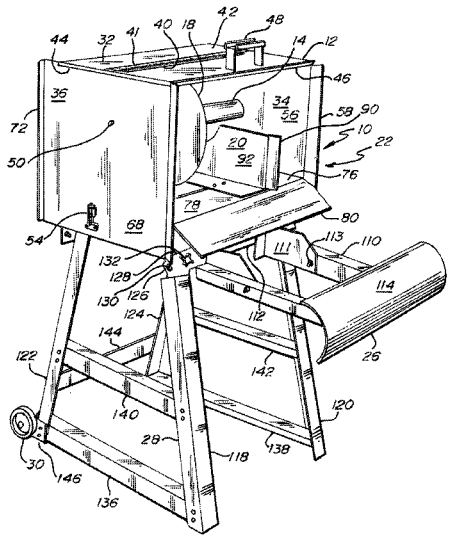
1 Claim, 8 Drawing Sheets