US005725935A

United States Patent [19]

Rajan

[11] Patent Number: 5,725,935

[45] Date of Patent: Mar. 10, 1998

[54] SIGNAGE ARTICLES AND METHODS OF MAKING SAME

[75] Inventor: **J. Sundar Rajan**, Woodbury, Minn.

[73] Assignee: **Minnesota Mining and Manufacturing Company**, St. Paul, Minn.

[21] Appl. No.: **720,266**

[22] Filed: **Sep. 26, 1996**

Related U.S. Application Data

[63] Continuation of Ser. No. 335,468, Nov. 7, 1994, abandoned.

[51] **Int. Cl.**[6] **B32B 3/00**; B32B 21/14

[52] **U.S. Cl.** **428/195**; 428/72; 428/323; 428/406; 428/407; 428/412; 428/423.1; 428/457; 428/488.1; 428/500; 428/524; 428/537.5

[58] **Field of Search** 428/195, 323, 428/406, 407, 423.1, 457, 480, 500, 524, 537.5, 72, 412, 451, 488.1

[56] **References Cited**

U.S. PATENT DOCUMENTS

Re. 24,906	12/1960	Ulrich .
2,407,680	9/1946	Palmquist et al. .
2,684,301	7/1954	Mayo .
3,190,178	6/1965	McKenzie .
3,684,348	8/1972	Rowlan .
3,857,731	12/1974	Merrill, Jr. et al. .
4,025,159	5/1977	McGrath .
4,311,723	1/1982	Magrauer .
4,644,966	2/1987	Bailey et al. .
4,714,656	12/1987	Bradshaw et al. .
4,758,952	7/1988	Harris, Jr. et al. .
4,767,659	8/1988	Bailey et al. .
4,801,193	1/1989	Martin .
4,840,863	6/1989	Otsu et al. .
4,844,976	7/1989	Huang .
4,895,428	1/1990	Nelson et al. .
4,896,943	1/1990	Tolliver et al. .
4,938,563	7/1990	Nelson et al. .
4,959,265	9/1990	Wood et al. .
4,966,829	10/1990	Yasuda et al. .
5,064,272	11/1991	Bailey et al. .
5,066,098	11/1991	Kult et al. .
5,085,918	2/1992	Rajan et al. .
5,266,432	11/1993	Hayashi et al. .
5,286,544	2/1994	Graham .
5,294,490	3/1994	Sasaki et al. .

FOREIGN PATENT DOCUMENTS

0 309588 A1	4/1989	European Pat. Off. .	
0424131 A1	4/1991	European Pat. Off. .	
0 457 544	11/1991	European Pat. Off.	G03G 7/00
0 501 403	9/1992	European Pat. Off.	G03G 13/16
3515191	11/1985	Germany .	
3714288	11/1985	Germany .	
60-115958	10/1985	Japan	G03G 15/01
2126389	3/1984	United Kingdom .	

OTHER PUBLICATIONS

Tack Testing, Handbook of Adhesives, 3rd Edition, 1990, pp. 656–657.

(List continued on next page.)

Primary Examiner—William Krynski

Attorney, Agent, or Firm—Peter L. Olson; Robert H. Jordan; Douglas B. Little

[57] **ABSTRACT**

The present invention discloses signage articles having a layer of fused dry toner powder which is fused by employing a tacky pressure-sensitive adhesive and low compression. Suitable tacky pressure-sensitive adhesives include alkyl acrylate polymers or copolymers, alkyl vinyl ether polymers or copolymers, polyisobutylene, polybutadiene, and butadiene-styrene copolymers. Such signage articles further comprise a transparent cover layer disposed over the fused dry toner powder-bearing surface. Also disclosed are methods of forming signage articles, one method comprising the steps of applying dry toner powder to a first substrate surface, applying a composition including a tacky pressure-sensitive adhesive to a second substrate surface, and laminating the two substrates to admix the dry toner powder and the tacky pressure-sensitive adhesive. Either the first or second substrate may be the transparent cover layer of the resulting signage article.
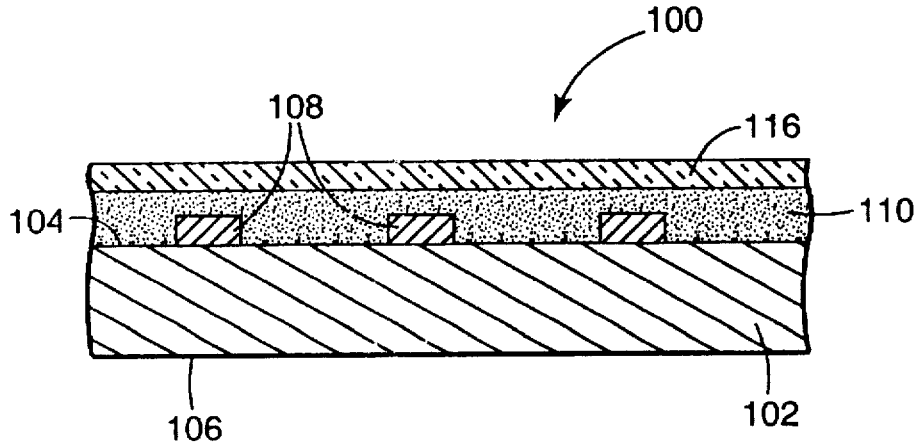
18 Claims, 2 Drawing Sheets