Fig 1

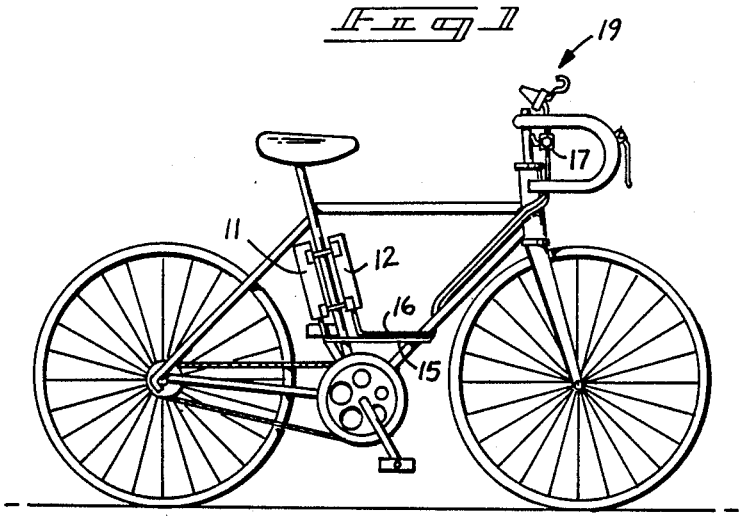

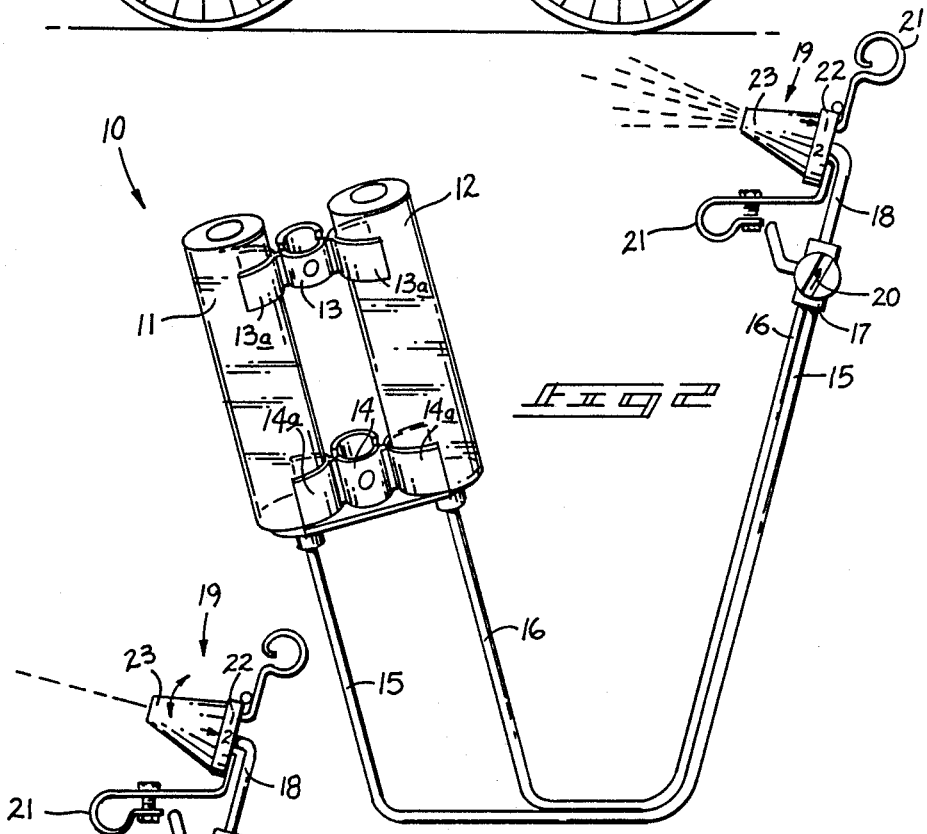

Fig 2

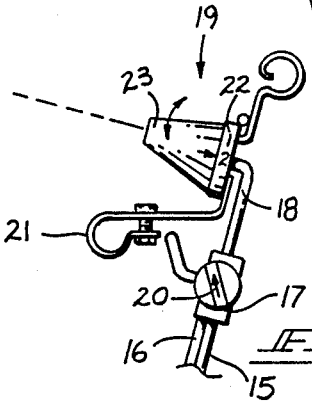

Fig 3