United States Patent [19]

Porter

[11] **Patent Number: 4,815,635**

[45] **Date of Patent: Mar. 28, 1989**

[54] **CYCLIST WATER SUPPLY APPARATUS**

[76] Inventor: **Willie E. Porter,** 3271 Louise St., Lynwood, Calif. 90262

[21] Appl. No.: **120,664**

[22] Filed: **Nov. 16, 1987**

[51] **Int. Cl.**[4] **B62J 39/00**

[52] **U.S. Cl.** **222/136;** 222/144.5; 222/609; 222/180; 222/192; 280/288.4

[58] **Field of Search** ..... 222/136, 609, 610, 175, 222/144.5, 145, 180, 372, 192; 224/35, 32 R; 280/289 H, 289 R; 239/33, 146

[56] **References Cited**

U.S. PATENT DOCUMENTS

581,767	5/1897	Powers	222/610 X
4,095,812	6/1978	Rowe	280/289 R
4,204,614	5/1980	Reeve	222/383 X
4,274,566	6/1981	Rowe	280/289 R X
4,526,298	7/1985	Boxer et al.	222/175 X
4,681,244	7/1987	Geddie	222/175 X

Primary Examiner—Joseph J. Rolla
Assistant Examiner—Nils E. Pedersen
Attorney, Agent, or Firm—Leon Gilden

[57] **ABSTRACT**

A water supply apparatus is utilized in conjunction with a bicycle to enable a rider to receive either a spray of cooling water or a stream for drinking purposes. A diaphragm-type pump supplies the water. Plural reservoirs enable a plurality of liquids to be transported and utilized, such as water for cooling the rider and a sucrose solution for energy.
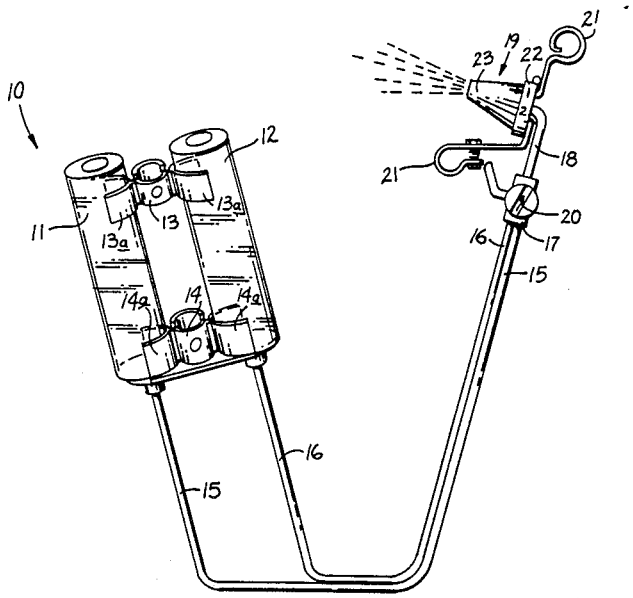
4 Claims, 1 Drawing Sheet