US008411235B1

(12) **United States Patent**
Barnidge et al.

(10) **Patent No.: US 8,411,235 B1**
(45) **Date of Patent: Apr. 2, 2013**

(54) **DISPLAYS FOR THREE-DIMENSIONAL IMAGING**

(75) Inventors: **Tracy J. Barnidge**, Marion, IA (US); **Paul R. Nemeth**, Springville, IA (US); **Alyssa A. Butterfield**, Marion, IA (US); **James D. Sampica**, Springville, IA (US)

(73) Assignee: **Rockwell Collins, Inc.**, Cedar Rapids, IA (US)

(*) Notice: Subject to any disclaimer, the term of this patent is extended or adjusted under 35 U.S.C. 154(b) by 447 days.

(21) Appl. No.: **12/725,256**

(22) Filed: **Mar. 16, 2010**

(51) **Int. Cl.**
G02F 1/1335 (2006.01)

(52) **U.S. Cl.** **349/112**

(58) **Field of Classification Search** 349/112
See application file for complete search history.

(56) **References Cited**

U.S. PATENT DOCUMENTS

4,043,638	A	8/1977	Kaufmann	
4,387,133	A	6/1983	Ichikawa et al.	
4,637,850	A	1/1987	Suzuki et al.	
4,715,686	A	12/1987	Iwashita et al.	
4,717,949	A	1/1988	Eichenlaub	
5,106,441	A	4/1992	Brosig et al.	
5,150,231	A	9/1992	Iwamoto et al.	
5,208,080	A	5/1993	Gajewski et al.	
5,217,811	A	6/1993	Filas et al.	
5,243,453	A	9/1993	Kawaguchi et al.	
5,275,680	A	1/1994	Sirkin et al.	
5,329,391	A	7/1994	Miyamoto et al.	
5,365,356	A	11/1994	McFadden	
5,371,619	A	12/1994	Sirkin et al.	
5,566,840	A	10/1996	Waldner et al.	
5,592,288	A	1/1997	Sampica et al.	
5,742,372	A	4/1998	Furukawa	
5,867,241	A	2/1999	Sampica et al.	
6,181,303	B1	1/2001	Johnson et al.	
6,204,967	B1	3/2001	Morishima et al.	
6,211,938	B1	4/2001	Mori	
6,388,724	B1	5/2002	Campbell et al.	
6,590,605	B1	7/2003	Eichenlaub	
6,614,057	B2	9/2003	Silvernail et al.	
6,784,612	B2	8/2004	Park et al.	
6,803,245	B2	10/2004	Auch et al.	
6,984,545	B2	1/2006	Grigg et al.	
6,998,648	B2	2/2006	Silvernail	
7,097,527	B2	8/2006	Matsuoka	
7,265,909	B2 *	9/2007	Matsui	359/620

(Continued)

FOREIGN PATENT DOCUMENTS

EP	0 556 351 B1	6/1995
EP	0 711 103 B1	3/2000

(Continued)

OTHER PUBLICATIONS

U.S. Appl. No. 12/012,722, filed Feb. 5, 2008, Nemeth et al.

(Continued)

Primary Examiner — Phu Vu
(74) *Attorney, Agent, or Firm* — Donna P. Suchy; Daniel M. Barbieri

(57) **ABSTRACT**

A display for presenting a stereoscopic image includes multiple layers of image forming devices configured to provide the stereoscopic image and an etched substrate configured to diffuse light projected through or from the multiple layers of image forming devices. The etched substrate is laminated or bonded to a front surface of the multiple layers of image forming devices.
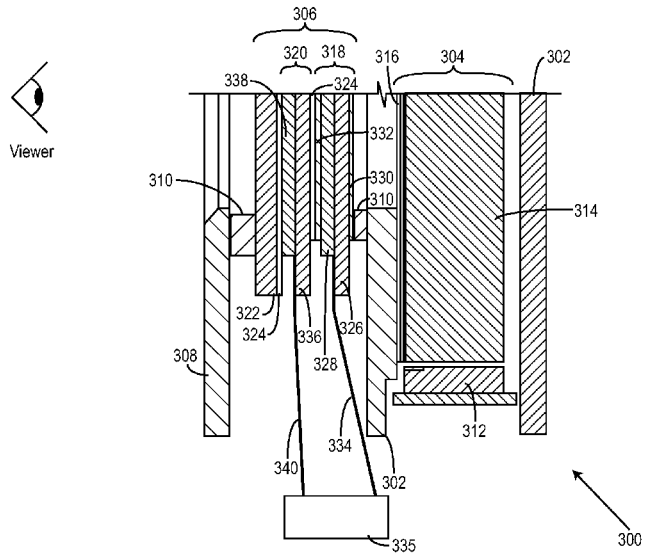
25 Claims, 6 Drawing Sheets