US009410735B2

(12) **United States Patent**
Maas

(10) **Patent No.: US 9,410,735 B2**
(45) **Date of Patent: Aug. 9, 2016**

(54) **REFRIGERATION APPLIANCE**

(71) Applicant: **Miele & Cie. KG**, Guetersloh (DE)

(72) Inventor: **Guenther Maas**, Guetersloh (DE)

(73) Assignee: **MIELE & CIE. KG**, Guetersloh (DE)

(*) Notice: Subject to any disclaimer, the term of this patent is extended or adjusted under 35 U.S.C. 154(b) by 0 days.

(21) Appl. No.: **14/719,343**

(22) Filed: **May 22, 2015**

(65) **Prior Publication Data**

US 2015/0338158 A1 Nov. 26, 2015

(30) **Foreign Application Priority Data**

May 26, 2014 (DE) 10 2014 107 366

(51) **Int. Cl.**

A47B 96/04	(2006.01)
F25D 29/00	(2006.01)
F25D 23/04	(2006.01)
F25D 23/02	(2006.01)

(52) **U.S. Cl.**

CPC ***F25D 29/00*** (2013.01); ***F25D 23/02*** (2013.01); ***F25D 23/028*** (2013.01); ***F25D 23/04*** (2013.01); *F25D 2600/00* (2013.01); *F25D 2700/02* (2013.01)

(58) **Field of Classification Search**

CPC H01H 13/183; F25D 23/02; F25D 23/04
USPC 312/401, 405; 200/61.76
See application file for complete search history.

(56) **References Cited**

U.S. PATENT DOCUMENTS

5,023,413	A *	6/1991	Staples	H01H 13/063 200/295
2005/0045457	A1*	3/2005	Park	F25D 29/005 200/61.7
2010/0018240	A1	1/2010	Hecht et al.	
2010/0307189	A1	12/2010	Keller et al.	
2011/0016907	A1	1/2011	Kang et al.	
2014/0268648	A1	9/2014	Gomes et al.	

FOREIGN PATENT DOCUMENTS

DE	202005011427	U1	11/2006
DE	202006014407	U1	1/2008
DE	102006061083	A1	6/2008
EP	2710923	A1	3/2014
WO	2006017863	A1	2/2006

OTHER PUBLICATIONS

U.S. Appl. No. 14/719,337, filed May 22, 2015.

* cited by examiner

Primary Examiner — Matthew Ing
(74) *Attorney, Agent, or Firm* — Leydig, Voit & Mayer

(57) **ABSTRACT**

A refrigeration appliance includes a body having an interior sealed by a closeable door by a seal disposed between the door and the body, and at least one control unit for actuating an opening mechanism acting on the door, whose control signal, which triggers the opening of the door, is configured to be generated by at least one sensor cooperating with a plunger, wherein the plunger has a contact surface for engagement of the sensor, and the plunger is supported in a passage of the door or of the body so that it is configured to be movable, together with the sensor engaged against the contact surface, in an axial longitudinal direction of the plunger and against a force of a spring element.
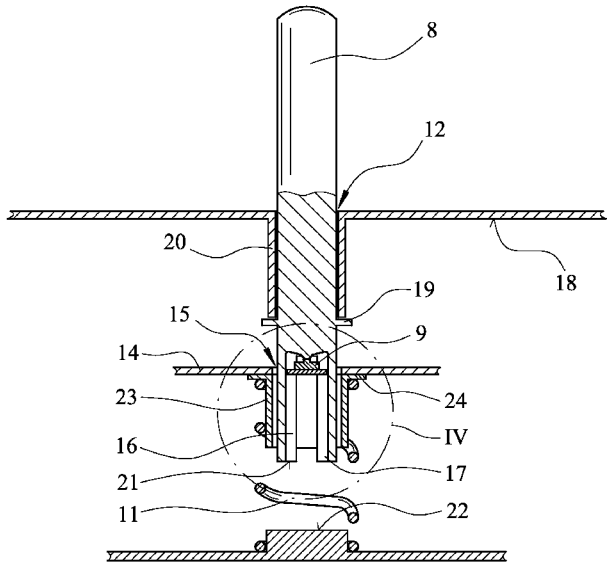
12 Claims, 6 Drawing Sheets