US009410635B2

(12) **United States Patent**
Akimoto et al.

(10) **Patent No.: US 9,410,635 B2**
(45) **Date of Patent: Aug. 9, 2016**

(54) **FUEL VAPOR CONTROL DEVICE**

(71) Applicant: **Kyosan Denki Co., Ltd.**, Koga, Ibaraki-pref. (JP)

(72) Inventors: **Yasuo Akimoto**, Koga (JP); **Nobuharu Muto**, Kitakatsushika-gun (JP)

(73) Assignee: **Kyosan Denki Co., Ltd.**, Koga, Ibaraki-pref. (JP)

(*) Notice: Subject to any disclaimer, the term of this patent is extended or adjusted under 35 U.S.C. 154(b) by 0 days.

(21) Appl. No.: **14/676,911**

(22) Filed: **Apr. 2, 2015**

(65) **Prior Publication Data**

US 2015/0285394 A1 Oct. 8, 2015

(30) **Foreign Application Priority Data**

Apr. 8, 2014 (JP) 2014-079607

(51) **Int. Cl.**
F15D 1/02 (2006.01)
F16K 17/30 (2006.01)
G05D 7/01 (2006.01)

(52) **U.S. Cl.**
CPC ***F16K 17/30*** (2013.01); ***G05D 7/0133*** (2013.01); *Y10T 137/7792* (2015.04)

(58) **Field of Classification Search**
USPC 138/43, 45, 46
See application file for complete search history.

(56) **References Cited**

U.S. PATENT DOCUMENTS

2,781,060 A * 2/1957 Frey D06F 39/088 138/46
3,561,471 A * 2/1971 Sands F16K 17/26 137/460
3,958,603 A * 5/1976 Bannon F16K 15/144 137/517
4,383,552 A * 5/1983 Baker G05D 7/0133 137/504
4,800,925 A * 1/1989 Yeoman B60H 1/00485 137/15.09
4,940,538 A * 7/1990 Kyster C02F 1/34 137/494
5,462,081 A * 10/1995 Perusek F16K 17/30 137/498
5,582,210 A * 12/1996 Bartholomew G05D 7/0106 138/45
5,634,491 A * 6/1997 Benedict E03C 1/08 137/504
6,173,734 B1 * 1/2001 Olivas F16K 17/30 137/458
2006/0260705 A1 * 11/2006 Baltes F16L 55/027 138/26
2007/0289642 A1 * 12/2007 Knapp F16K 15/026 137/528
2014/0246102 A1 9/2014 Uno et al.

FOREIGN PATENT DOCUMENTS

JP 2011-122586 6/2011
JP 2013-083296 5/2013

* cited by examiner

Primary Examiner — James Hook
(74) *Attorney, Agent, or Firm* — Harness, Dickey & Pierce, P.L.C.

(57) **ABSTRACT**

A fuel vapor control device has a flow control valve which regulates a flow amount of fuel vapor from a fuel tank to a canister. The flow control valve has a movable element accommodated in a case. The movable valve element has a central cylindrical part, an outer cylindrical part, and a disc part which connects the central cylindrical part and the outer cylindrical part. The central cylindrical part provides a central channel. The central channel provides a main channel which communicates an inlet and an outlet. A sub channel defined and formed between the movable element and the case is opened and closed by a valve formed by the case and the outer cylindrical part. The central channel makes easy setting of flow amount in regulated condition. Since turbulence is reduced, it is possible to perform stable regulation.
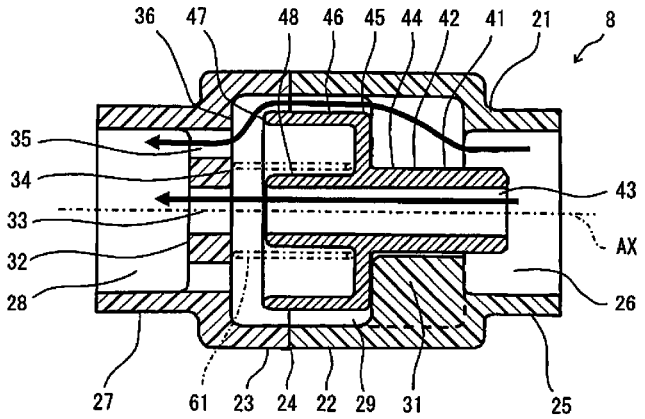
17 Claims, 5 Drawing Sheets