US009908635B2

(12) **United States Patent**
Snyder

(10) **Patent No.: US 9,908,635 B2**
(45) **Date of Patent: Mar. 6, 2018**

(54) **AIRCRAFT SYSTEM**

(71) Applicant: **Rolls-Royce North American Technologies, Inc.**, Indianapolis, IN (US)

(72) Inventor: **Douglas J. Snyder**, Carmel, IN (US)

(73) Assignee: **Rolls-Royce North American Technologies Inc.**, Indianapolis, IN (US)

(*) Notice: Subject to any disclaimer, the term of this patent is extended or adjusted under 35 U.S.C. 154(b) by 773 days.

(21) Appl. No.: **14/204,638**

(22) Filed: **Mar. 11, 2014**

(65) **Prior Publication Data**

US 2016/0122027 A1 May 5, 2016

Related U.S. Application Data

(60) Provisional application No. 61/799,853, filed on Mar. 15, 2013.

(51) **Int. Cl.**

B64D 41/00	(2006.01)
F01D 13/00	(2006.01)
F02C 6/00	(2006.01)

(52) **U.S. Cl.**

CPC ***B64D 41/00*** (2013.01); ***F01D 13/00*** (2013.01); ***F02C 6/00*** (2013.01); *F05D 2220/34* (2013.01)

(58) **Field of Classification Search**

CPC ... B64D 41/00; F02C 6/00; F02C 6/08; F02C 7/16; F02C 7/18; F02C 7/185; F01D 13/00; F01D 11/20; F01D 11/24; F05D 2220/34; F05D 2270/122; F05D 2270/301; F05B 2220/10; F05B 2220/706; F02K 7/16; F02K 3/08; F02K 3/105; F02K 3/115

See application file for complete search history.

(56) **References Cited**

U.S. PATENT DOCUMENTS

2,519,130 A *	8/1950	Alan	F02C 3/00 60/226.1
2,706,255 A	4/1955	Breaux et al.	
2,893,204 A	7/1959	Anderson et al.	
4,934,154 A	6/1990	Altoz et al.	
5,174,719 A *	12/1992	Walsh	F16N 27/005 184/6.11
5,201,182 A	4/1993	Grignon et al.	
5,956,960 A *	9/1999	Niggeman	B64D 13/06 60/785

(Continued)

Primary Examiner — Ryan J Walters
Assistant Examiner — Lawrence Averick
(74) *Attorney, Agent, or Firm* — Barnes & Thornburg LLP

(57) **ABSTRACT**

An aircraft capable of operating at a variety of speeds includes a power plant and an auxiliary turbine. The auxiliary turbine can be a ram air turbine used to expand and cool an airflow and provide work. The cooled airflow from the auxiliary turbine can be used in a heat exchange device such as, but not limited to, a fuel/air heat exchanger. In one embodiment the cooled airflow can be used to exchange heat with a compressor airflow being routed to cool a turbine. Work developed from the auxiliary turbine can be used to power a heating device and rotate a device to add work to a shaft of the aircraft power plant. In one form the aircraft power plant is a gas turbine engine and the work developed from the auxiliary turbine is used to heat a combustor flow or to drive a shaft that couples a turbine and a compressor.
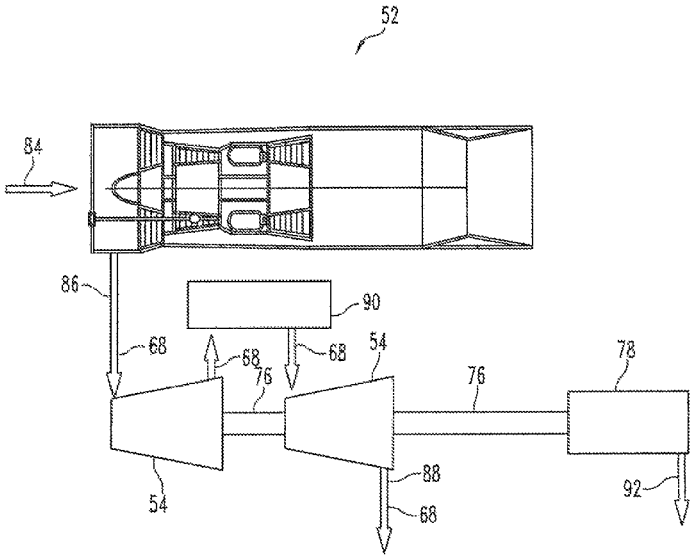
11 Claims, 5 Drawing Sheets