Nov. 16, 1954 S. S. ROBY ET AL 2,694,234

FINGER GUARD FOR SWINGING DOORS

Filed June 26, 1953

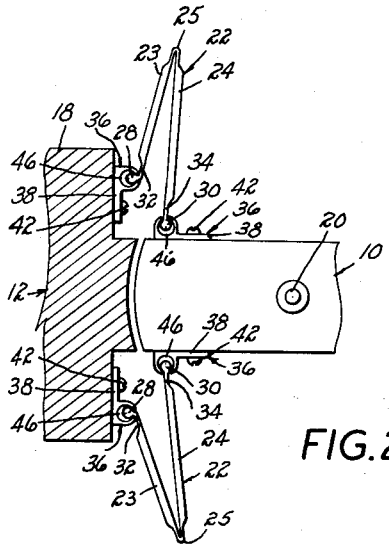

FIG.2

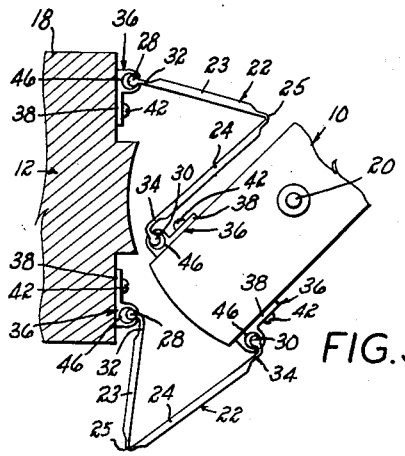

FIG.3

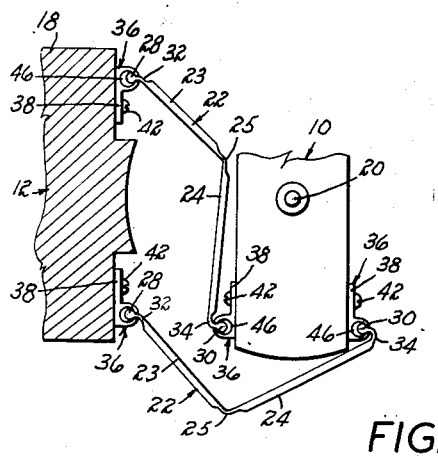

FIG.4

FIG.1

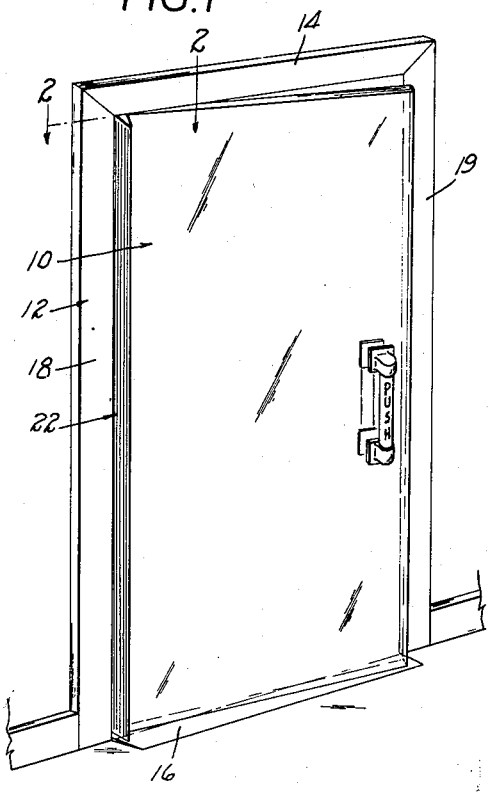

FIG.5

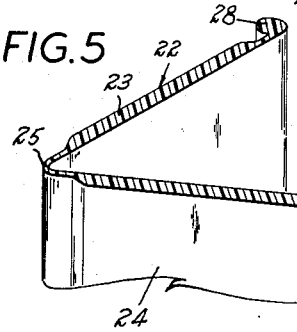

FIG.6

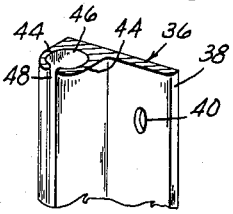

INVENTORS
WILLIAM N. FORBES
BY SHELDON S. ROBY

Lindsey and Prutzman
ATTORNEYS