US006989134B2

(12) **United States Patent**
Tonkovich et al.

(10) **Patent No.: US 6,989,134 B2**
(45) **Date of Patent: Jan. 24, 2006**

(54) **MICROCHANNEL APPARATUS, METHODS OF MAKING MICROCHANNEL APPARATUS, AND PROCESSES OF CONDUCTING UNIT OPERATIONS**

(75) Inventors: **Anna Lee Tonkovich**, Marysville, OH (US); **Gary Roberts**, West Richland, WA (US); **Sean P. Fitzgerald**, Columbus, OH (US); **Timothy M. Werner**, Traverse City, MI (US); **Matthew B. Schmidt**, Columbus, OH (US); **Robert J. Luzenski**, Marysville, OH (US); **G. Bradley Chadwell**, Reynoldsburg, OH (US); **James A. Mathias**, Columbus, OH (US); **Abhishek Gupta**, Dublin, OH (US); **David J. Kuhlmann**, Powell, OH (US); **Thomas D. Yuschak**, Dublin, OH (US)

(73) Assignee: **Velocys Inc.**, Plain City, OH (US)

(*) Notice: Subject to any disclaimer, the term of this patent is extended or adjusted under 35 U.S.C. 154(b) by 194 days.

(21) Appl. No.: **10/306,722**

(22) Filed: **Nov. 27, 2002**

(65) **Prior Publication Data**

US 2004/0099712 A1 May 27, 2004

(51) **Int. Cl.**
B01J 10/00 (2006.01)
F28F 3/08 (2006.01)

(52) **U.S. Cl.** **422/189**; 165/167

(58) **Field of Classification Search** 228/183; 560/1; 165/104.19, 167; 422/99, 189, 190, 422/191, 211

See application file for complete search history.

(56) **References Cited**

U.S. PATENT DOCUMENTS

3,176,763	A	4/1965	Frohlich	165/166
4,438,809	A	3/1984	Papis	165/166
4,651,811	A	3/1987	Frauenfeld	165/10
4,795,618	A	1/1989	Laumen	422/202
4,953,634	A	9/1990	Nelson	165/147
5,016,707	A	5/1991	Nguyen	165/167
5,829,517	A	11/1998	Schmid	165/167
5,835,345	A *	11/1998	Staskus et al.	361/699
5,997,826	A	12/1999	Lodeng et al.	422/190
6,165,633	A	12/2000	Negishi	429/17
6,192,596	B1	2/2001	Bennett et al.	34/76
6,220,497	B1	4/2001	Benz et al.	228/118
6,332,568	B1	12/2001	Christenson	228/193
6,494,614	B1 *	12/2002	Bennett et al.	366/336
6,517,234	B1	2/2003	Kopf-Sill et al.	366/340
6,613,446	B1	9/2003	Peters et al.	428/593
6,622,519	B1 *	9/2003	Mathias et al.	62/611

(Continued)

FOREIGN PATENT DOCUMENTS

EP 1306639 A2 5/2003

(Continued)

OTHER PUBLICATIONS

PCT Invitation to Pay Additional Fees with partial International Search Report, PCT/US03/37936, mailed Feb. 23, 2005.

Primary Examiner—Kiley S. Stoner
(74) *Attorney, Agent, or Firm*—Frank Rosenberg

(57) **ABSTRACT**

Novel methods of making laminated, microchannel devices are described. Examples include: assembly from thin strips rather than sheets; and hot isostatic pressing (HIPing) to form devices with a hermetically sealed wall. Laminated microchannel articles having novel features are also described. The invention includes processes conducted using any of the articles described.
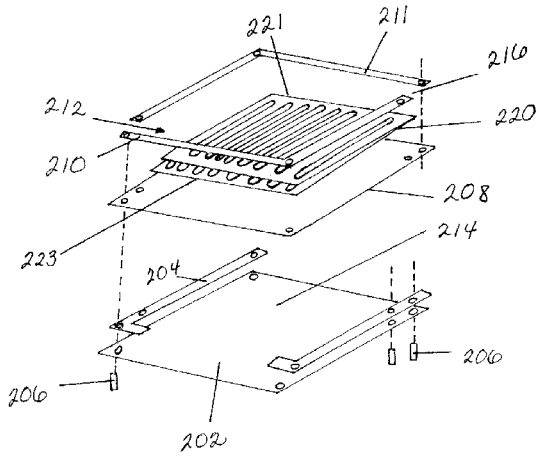
18 Claims, 18 Drawing Sheets