US008668734B2

(12) **United States Patent**
Hildebrand et al.

(10) **Patent No.: US 8,668,734 B2**
(45) **Date of Patent: Mar. 11, 2014**

(54) **INTRAOCULAR LENS DELIVERY DEVICES AND METHODS OF USE**

(75) Inventors: **Daniel Hildebrand**, San Francisco, CA (US); **Claudio Argento**, Los Gatos, CA (US); **Gregory V. Matthews**, San Francisco, CA (US)

(73) Assignee: **PowerVision, Inc.**, Belmont, CA (US)

(*) Notice: Subject to any disclaimer, the term of this patent is extended or adjusted under 35 U.S.C. 154(b) by 0 days.

(21) Appl. No.: **13/180,427**

(22) Filed: **Jul. 11, 2011**

(65) **Prior Publication Data**

US 2012/0022547 A1 Jan. 26, 2012

Related U.S. Application Data

(60) Provisional application No. 61/363,155, filed on Jul. 9, 2010.

(51) **Int. Cl.**
A61F 2/16 (2006.01)

(52) **U.S. Cl.**
USPC **623/6.12**

(58) **Field of Classification Search**
USPC 606/107; 623/6.11, 6.12
See application file for complete search history.

(56) **References Cited**

U.S. PATENT DOCUMENTS

4,111,995	A	9/1978	Nelson
4,253,199	A	3/1981	Banko
4,254,509	A	3/1981	Tennant
4,304,895	A	12/1981	Loshaek
4,373,218	A	2/1983	Schachar
4,409,691	A	10/1983	Levy
4,423,809	A	1/1984	Mazzocco
4,435,856	A	3/1984	L'Esperance
4,466,705	A	8/1984	Michelson
4,490,860	A	1/1985	Rainin
4,494,254	A	1/1985	Lopez
4,512,040	A	4/1985	McClure
4,528,311	A	7/1985	Beard et al.
4,575,373	A	3/1986	Johnson
4,585,457	A	4/1986	Kalb
4,600,004	A	7/1986	Lopez et al.
4,604,295	A	8/1986	Humphreys
4,615,701	A	10/1986	Woods
4,620,954	A	11/1986	Singer et al.
4,681,102	A	7/1987	Bartell
4,685,921	A	8/1987	Peyman
4,685,922	A	8/1987	Peyman
4,693,717	A	9/1987	Michelson

(Continued)

FOREIGN PATENT DOCUMENTS

EP	0898972	A2	3/1999
EP	1356791	B1	4/2006

(Continued)

OTHER PUBLICATIONS

Matthews, Gregory V.; U.S. Appl. No. 13/427,617 entitled "Intraocular Lens Loading Systems and Methods of Use," filed Mar. 22, 2012.

(Continued)

Primary Examiner — Ryan Severson
Assistant Examiner — Jonathan W Miles
(74) *Attorney, Agent, or Firm* — Shay Glenn LLP

(57) **ABSTRACT**

Intraocular lens delivery devices and methods of use.
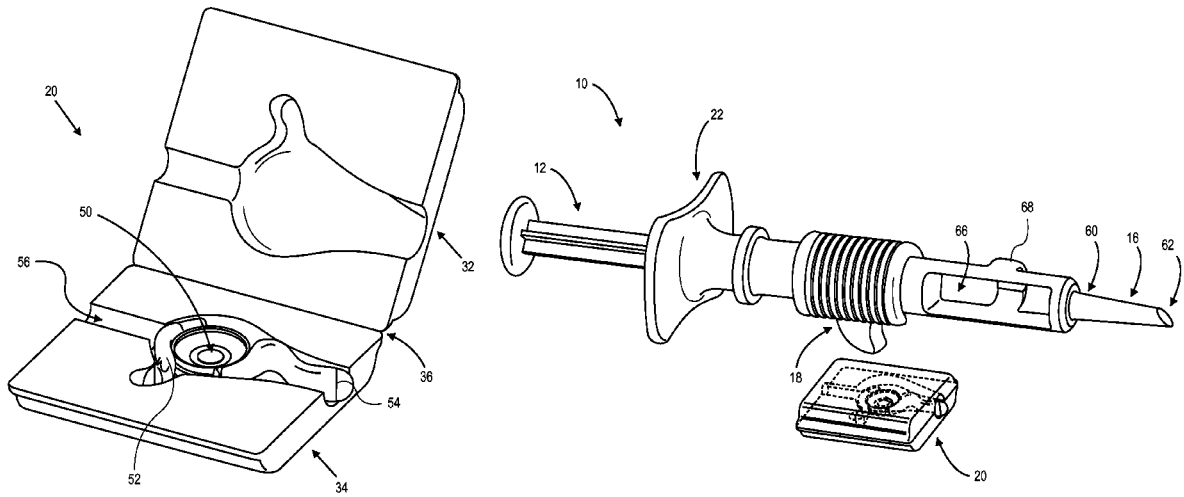
6 Claims, 11 Drawing Sheets