US005565934A

United States Patent [19]

Boudreau et al.

[11] **Patent Number: 5,565,934**

[45] **Date of Patent: Oct. 15, 1996**

[54] **MOLDED VIDEO DISPLAY SCREEN BEZEL**

[75] Inventors: **David E. Boudreau**, Leominster; **George A. Doumani**, North Andover; **William J. Pauplis**, Hudson; **Victor M. Samarov**, Carlisle, all of Mass.

[73] Assignee: **Digital Equipment Corporation**, Maynard, Mass.

[21] Appl. No.: **831,720**

[22] Filed: **Feb. 5, 1992**

[51] **Int. Cl.**[6] **H04N 5/65**; H01J 61/30

[52] **U.S. Cl.** ..... **348/818**; 220/2.1 A; 348/823

[58] **Field of Search** 358/246, 247, 358/248, 255, 245, 485; 248/917, 918; 312/7.2, 223.2; 269/908; 425/522

[56] **References Cited**

U.S. PATENT DOCUMENTS

2,750,587	6/1956	Nicholson et al. .	
3,013,117	12/1961	Nichol	358/245
3,136,850	6/1964	Blaker .	
3,200,188	8/1965	Lange et al.	358/245
3,206,056	9/1965	Stel	358/245
3,271,516	9/1966	Damm .	
3,310,194	3/1967	Bradu et al.	358/245
3,716,662	2/1973	Johnson .	
4,064,542	12/1977	Enkhaus et al. .	
4,158,419	6/1979	Nolan	358/246
4,306,253	12/1981	Nakamura .	
4,360,838	11/1982	Babicz et al. .	
4,560,900	12/1985	Ikegaki et al. .	
4,572,592	2/1986	Haven	358/254
4,593,227	6/1986	Bruce et al.	358/248
4,686,415	8/1987	Strauss	313/482
4,731,557	3/1988	Asano et al. .	
4,820,224	4/1989	Lemche .	
4,873,578	10/1989	Tognoni et al.	358/254
5,019,745	5/1991	Deal et al. .	
5,041,944	8/1991	Campisi	358/254
5,122,928	6/1992	Lo	358/254
5,166,802	11/1992	Thiele et al.	358/254

Primary Examiner—Sandra L. O'Shea
Assistant Examiner—John Ning
Attorney, Agent, or Firm—Denis G. Maloney; Arthur W. Fisher

[57] **ABSTRACT**

A method and apparatus for molding a video display screen bezel to a video display device, such as a CRT, is disclosed. The bezel is molded in such a way as to eliminate the need for fasteners between the bezel and the CRT and between the bezel and a housing or some other structural support. The molded bezel also prevents any undesirable shifting of the CRT with respect to the bezel due to accidental dynamic loads. The molding material conforms to the surface of the CRT compensating for any dimensional variations in the CRT while minimizing the size of the bezel. Molded within the bezel is a compensating means which absorbs stresses generated by the molding material both during and following the molding process which might otherwise be exerted on the CRT.
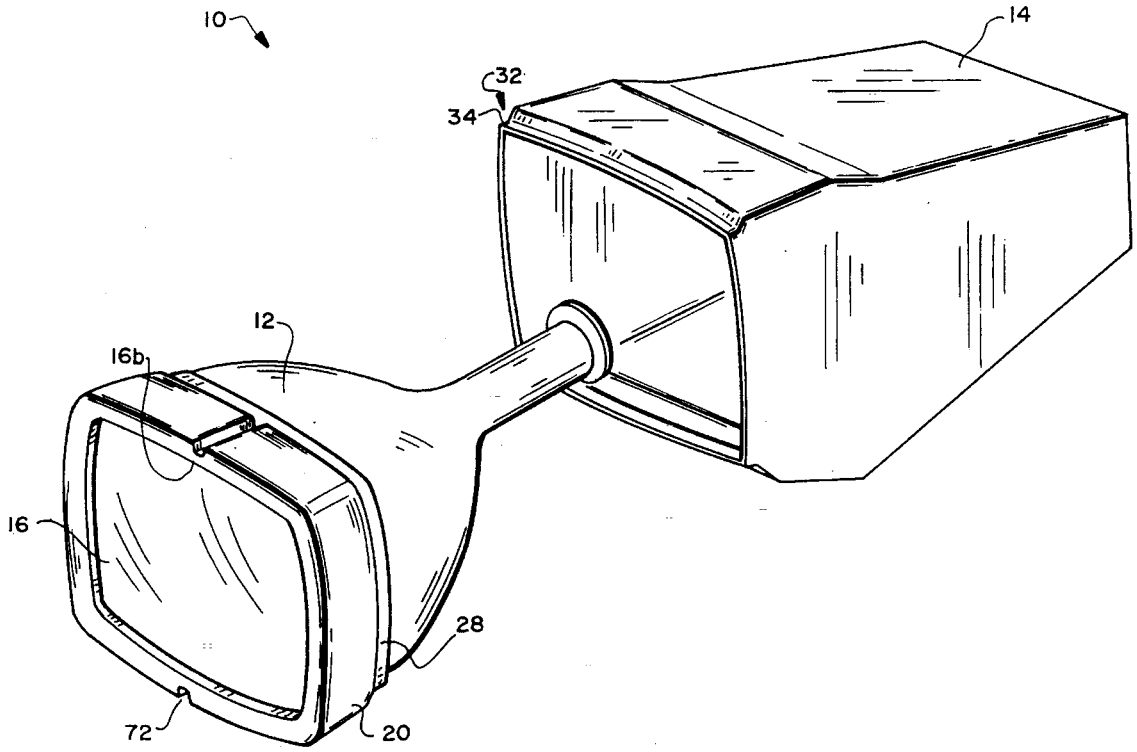
29 Claims, 6 Drawing Sheets