US007161334B1

(12) **United States Patent**
Stamps et al.

(10) **Patent No.: US 7,161,334 B1**
(45) **Date of Patent: Jan. 9, 2007**

(54) **MODULAR HIGH VOLTAGE POWER SUPPLY FOR CHEMICAL ANALYSIS**

(75) Inventors: **James F. Stamps**, Livermore, CA (US); **Daniel D. Yee**, Dublin, CA (US)

(73) Assignee: **Sandia National Laboratories**, Livermore, CA (US)

(*) Notice: Subject to any disclaimer, the term of this patent is extended or adjusted under 35 U.S.C. 154(b) by 0 days.

(21) Appl. No.: **10/414,979**

(22) Filed: **Apr. 16, 2003**

(51) **Int. Cl.**
G05F 1/40 (2006.01)
G05F 5/00 (2006.01)

(52) **U.S. Cl.** **323/266**; 323/275; 323/283; 323/299; 363/146

(58) **Field of Classification Search** 365/51; 361/728–733, 785, 788, 791; 320/148; 326/33, 326/34; 330/296; 307/44, 45, 60, 86; 323/266, 323/275, 276, 277, 283, 285, 299; 363/146
See application file for complete search history.

(56) **References Cited**

U.S. PATENT DOCUMENTS

4,354,148	A *	10/1982	Tada et al.	320/148
5,846,396	A	12/1998	Zanzucchi et al.	
5,977,796	A *	11/1999	Gabara	326/34
6,083,763	A	7/2000	Balch	
6,224,728	B1	5/2001	Oborny et al.	
6,358,387	B1	3/2002	Kopf-Sill et al.	
6,788,150	B1 *	9/2004	Joly et al.	330/296

* cited by examiner

Primary Examiner—Jessica Han
(74) *Attorney, Agent, or Firm*—Cascio Schmeyer & Zervas

(57) **ABSTRACT**

A high voltage power supply for use in a system such as a microfluidics system, uses a DC—DC converter in parallel with a voltage-controlled resistor. A feedback circuit provides a control signal for the DC—DC converter and voltage-controlled resistor so as to regulate the output voltage of the high voltage power supply, as well as, to sink or source current from the high voltage supply.
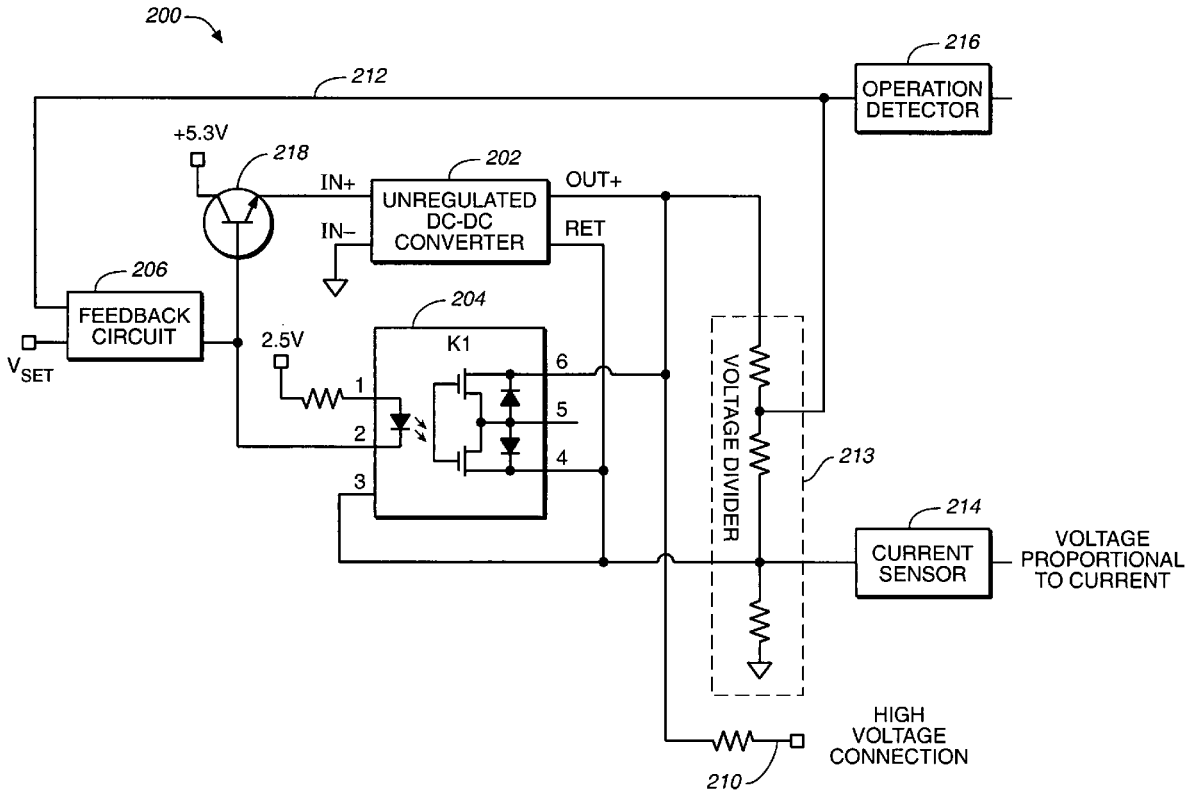
7 Claims, 10 Drawing Sheets