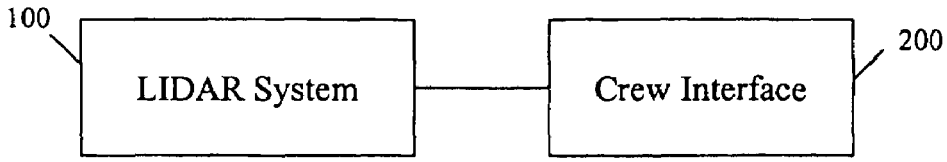
100
LIDAR System
Crew Interface
200

FIG. 1

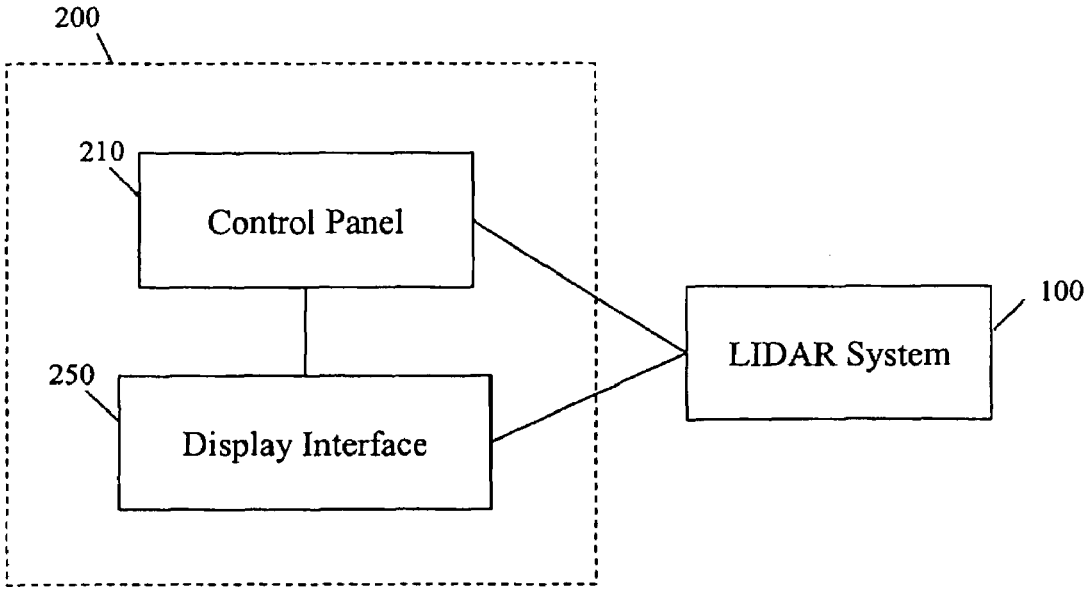
200
210
Control Panel
250
Display Interface
LIDAR System
100

FIG. 2