FIG. 1

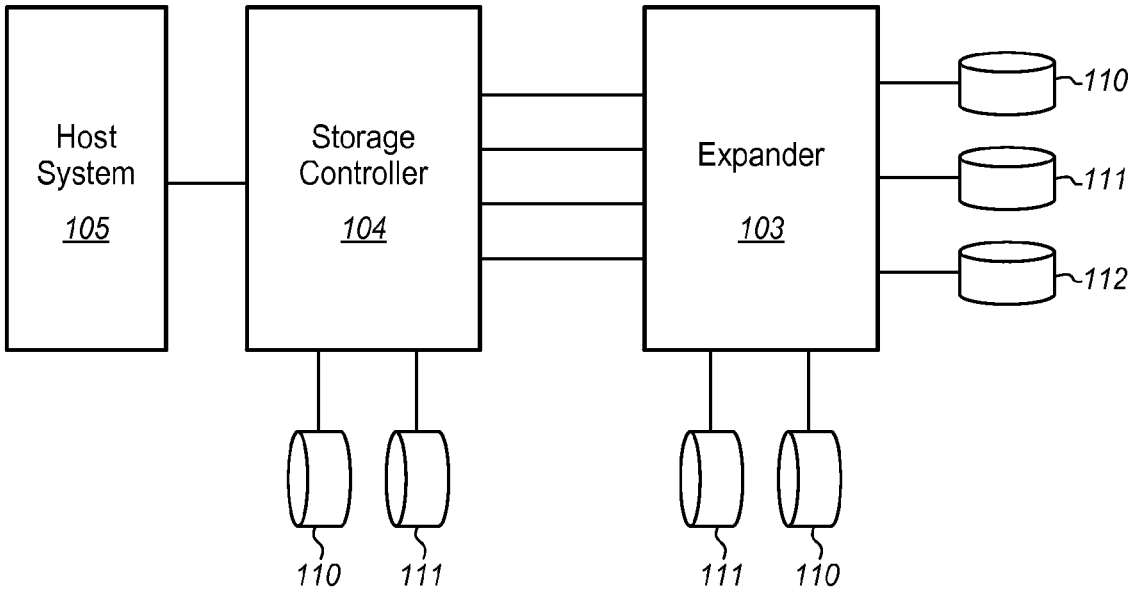
Host System
105
Storage Controller
104
Expander
103
110
111
112
110
111
111
110