US005640234A

United States Patent [19]

Roth et al.

[11] Patent Number: 5,640,234

[45] Date of Patent: Jun. 17, 1997

[54] **OPTICAL SENSOR FOR DETECTION OF CHEMICAL SPECIES**

[75] Inventors: **Christoph Roth**, Saitama; **Yuan Liu**, Kawagoe, both of Japan; **Werner Prass**, Mainz, Germany; **Tetsu Yamamoto**; **Kenji Motosugi**, both of Kawagoe, Japan

[73] Assignee: **Hoechst Aktiengesellschaft**, Frankfurt, Germany

[21] Appl. No.: **545,631**

[22] PCT Filed: **May 31, 1994**

[86] PCT No.: **PCT/EP94/01768**

§ 371 Date: **Nov. 7, 1995**

§ 102(e) Date: **Nov. 7, 1995**

[87] PCT Pub. No.: **WO94/28395**

PCT Pub. Date: **Dec. 8, 1994**

[30] **Foreign Application Priority Data**

Jun. 2, 1993 [JP] Japan 5-131975

[51] **Int. Cl.**[6] **G01N 21/41**

[52] **U.S. Cl.** **356/128**; 356/382; 250/227.14; 385/12; 385/141

[58] **Field of Search** 356/128, 382; 250/227.14, 227.18; 385/12, 141

[56] **References Cited**

U.S. PATENT DOCUMENTS

4,270,049	5/1981	Tanaka et al. .	
4,373,768	2/1983	Clark	356/44
5,082,629	1/1992	Burgess et al.	356/128
5,120,131	6/1992	Lukosz	356/351
5,513,913	5/1996	Ball et al.	356/32

FOREIGN PATENT DOCUMENTS

0 481 440	4/1992	European Pat. Off. .
0 487 992	6/1992	European Pat. Off. .
0 584 005	2/1994	European Pat. Off. .

OTHER PUBLICATIONS

Reuter et al., "Monitoring Humidity by Polyimide Lightguides", *Appl. Phys. Lett.* 52(10): 778–779, 7 Mar. 1988.

Patent Abstracts of Japan 17(290): (P–1549) 3 Jun. 1993 & JP.A.05 019 123 (Asahi Seisakushiyo) 29 Jan. 1993.

Primary Examiner—Richard A. Rosenberger
Attorney, Agent, or Firm—Curtis, Morris & Safford, P.C.

[57] **ABSTRACT**

Disclosed and claimed is an optical sensor for the detection of chemical species. The optical sensor includes an optical waveguide having a guiding thin film. The thickness of the refrative index of the guiding thin film changes due to adsorption or absorption of the chemical species or reaction of the chemical species with the guiding thin film. The thickness of the guiding thin film is above the cutoff thickness in the presence of gaseous or liquid chemical species to be detected. And, the thickness of the guiding thin film is below the cutoff thickness in the absence of such chemical species.
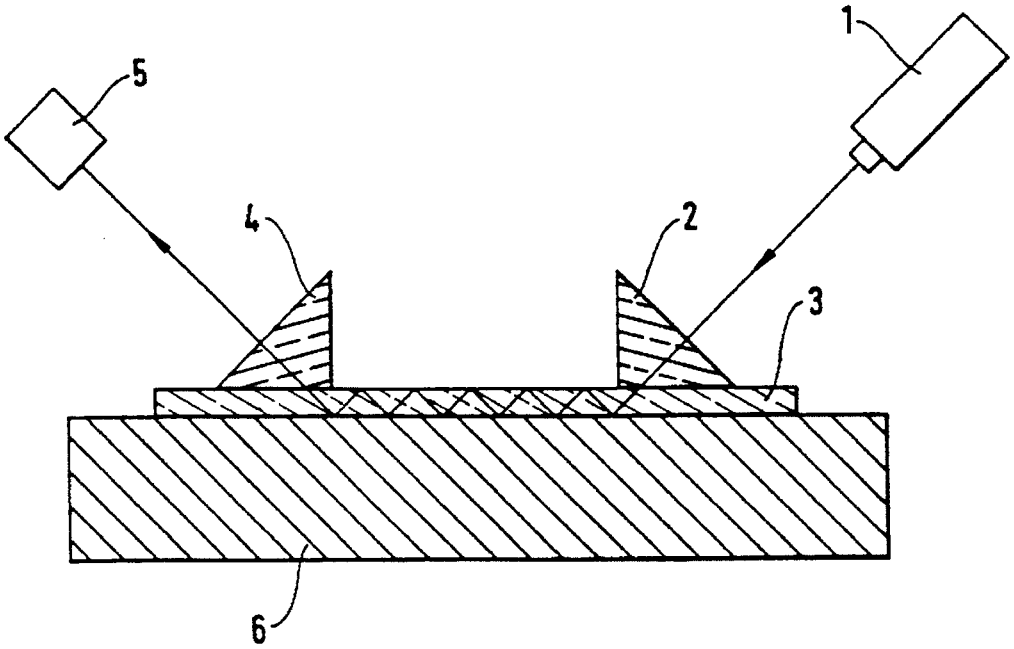
9 Claims, 5 Drawing Sheets