US005519534A

# United States Patent [19]

**Smith et al.**

[11] **Patent Number: 5,519,534**

[45] **Date of Patent: May 21, 1996**

[54] **IRRADIANCE ATTACHMENT FOR AN OPTICAL FIBER TO PROVIDE A UNIFORM LEVEL OF ILLUMINATION ACROSS A PLANE**

[75] Inventors: **Paul D. Smith**, Annapolis; **John Cole**, Potomac; **Frank Harrington**, Catonsville, all of Md.; **Eric F. Bernstein**, Wynnewood, Pa.

[73] Assignee: **The Government of the United States of America as represented by the Secretary of the Department of Health and Human Services**, Washington, D.C.

[21] Appl. No.: **248,918**

[22] Filed: **May 25, 1994**

[51] **Int. Cl.**[6] ..... **G02B 5/02**; G01J 1/04; A61B 17/36; A61N 5/00

[52] **U.S. Cl.** ..... **359/599**; 359/900; 250/228; 356/236; 385/31; 385/84; 606/16; 606/18; 607/88

[58] **Field of Search** ..... 250/228; 356/236; 359/896, 579, 900; 385/31, 32, 77, 78, 79, 84; 606/2, 10, 15, 16, 17, 18, 19; 607/88, 89, 91, 92, 93

[56] **References Cited**

U.S. PATENT DOCUMENTS

| | | | |
|---|---|---|---|
| 2,342,771 | 2/1944 | Voigt | 356/236 |
| 3,847,024 | 11/1974 | Beever et al. | 356/236 |
| 3,874,799 | 4/1975 | Isaacs et al. | 356/236 |
| 3,968,363 | 7/1976 | Mielenz et al. | 250/228 |
| 4,580,557 | 4/1986 | Hertzmann . | |
| 4,583,860 | 4/1986 | Butner | 356/236 |
| 4,645,922 | 2/1987 | Welbourn et al. | 356/236 |
| 4,651,262 | 3/1987 | Piironen . | |
| 4,693,556 | 9/1987 | McCaughan, Jr. . | |
| 4,881,811 | 11/1989 | O'Brien | 356/236 |
| 4,883,333 | 11/1989 | Yanez . | |
| 4,889,129 | 12/1989 | Dougherty et al. . | |
| 4,950,059 | 8/1990 | Roberts . | |
| 4,986,628 | 1/1991 | Lozhenko et al. . | |
| 4,998,930 | 3/1991 | Lundahl | 606/15 |
| 5,047,006 | 9/1991 | Brandston et al. . | |
| 5,059,191 | 10/1991 | Beyer et al. . | |
| 5,133,709 | 7/1992 | Prince . | |
| 5,153,426 | 10/1992 | Konrad et al. | 250/228 |
| 5,212,448 | 5/1993 | Le Roux et al. . | |
| 5,225,780 | 7/1993 | Riederer et al. . | |
| 5,241,271 | 8/1993 | Taguchi et al. . | |
| 5,243,283 | 9/1993 | Tokunaga et al. . | |
| 5,251,004 | 10/1993 | Doiron et al. | 356/236 |
| 5,309,339 | 5/1994 | Webb . | |
| 5,344,419 | 9/1994 | Spears | 606/17 |
| 5,373,571 | 12/1994 | Reid et al. | 385/31 |

FOREIGN PATENT DOCUMENTS

| | | | |
|---|---|---|---|
| 2417399 | 10/1975 | Germany | 356/236 |
| 3327551 | 2/1985 | Germany | 356/236 |
| 0101714 | 5/1988 | Japan | 356/236 |
| WO90/00420 | 7/1989 | WIPO . | |

OTHER PUBLICATIONS

Berger et al; "Spectroscopy of Matrices and Thin Films with an Integrating Sphere", Applied Spectroscopy, vol. 43, No. 2, 1989 pp. 320–324.

*Primary Examiner*—Ricky D. Shafer
*Attorney, Agent, or Firm*—Lowe, Price, LeBlanc & Becker

[57] **ABSTRACT**

A irradiation attachment for an optical fiber which provides an output of light that has a highly uniform intensity. The device includes a hollow spherical shell having a diffusive reflective surface or target supported therein. Light is directed into the hollow spherical shell so that it reflects off the diffusive reflective surface or target. The reflected light is internally reflected off the inner surface of the hollow spherical shell several times before passing through an output aperture. As a result of the internal reflection within the hollow spherical shell, the light leaving the device has a highly uniform intensity. The device is particularly useful for photodynamic therapy.
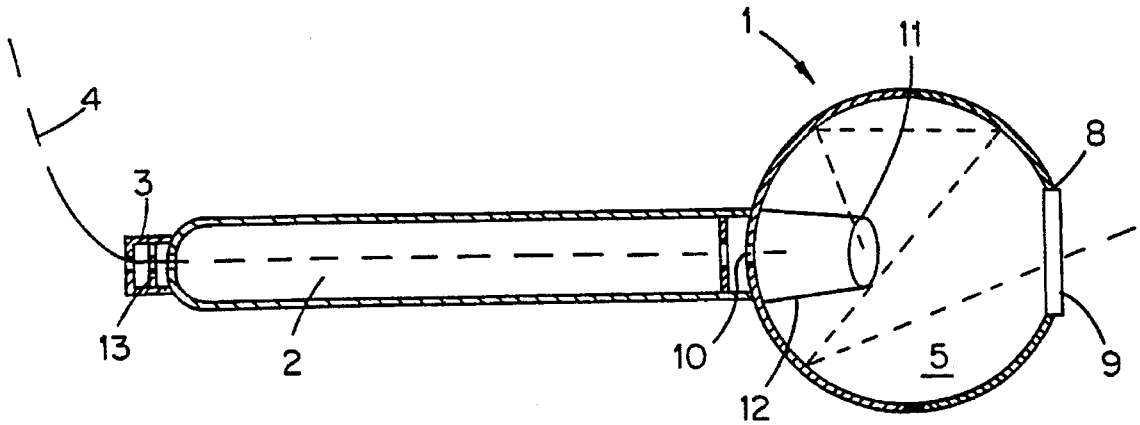
**18 Claims, 4 Drawing Sheets**