July 7, 1931. B. T. BALLARD ET AL 1,813,834

LIQUID MEASURING APPARATUS

Filed Jan. 30, 1930

Fig-2

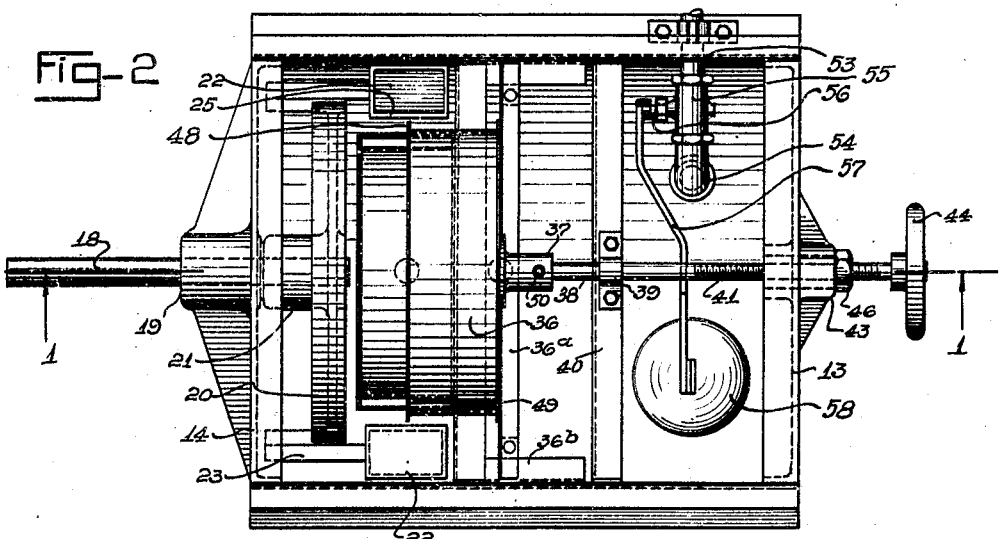


Fig-1

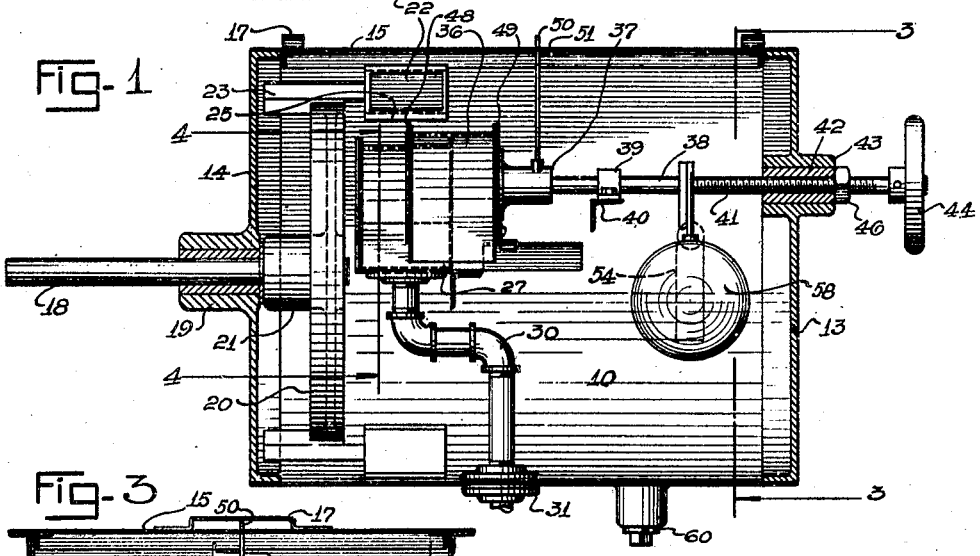


Fig-3

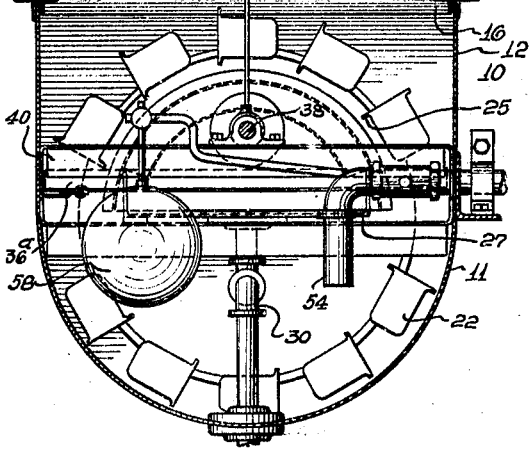


Fig-4

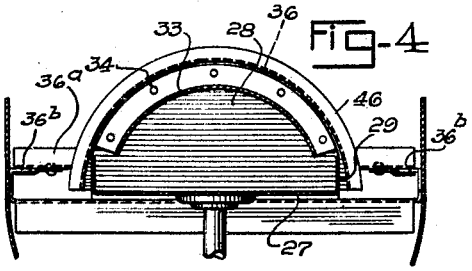


INVENTOR
BERNARD T. BALLARD.
FRED J. GOUGH.
BY L. A. Paley
ATTORNEY