US007913534B1

(12) **United States Patent**
Robinson et al.

(10) **Patent No.: US 7,913,534 B1**
(45) **Date of Patent: Mar. 29, 2011**

(54) **MICROFABRICATED FIELD CALIBRATION ASSEMBLY FOR ANALYTICAL INSTRUMENTS**

(75) Inventors: **Alex L. Robinson**, Albuquerque, NM (US); **Ronald P. Manginell**, Albuquerque, NM (US); **Matthew W. Moorman**, Albuquerque, NM (US); **Philip J. Rodacy**, Albuquerque, NM (US); **Robert J. Simonson**, Cedar Crest, NM (US)

(73) Assignee: **Sandia Corporation**, Albuquerque, NM (US)

(*) Notice: Subject to any disclaimer, the term of this patent is extended or adjusted under 35 U.S.C. 154(b) by 482 days.

(21) Appl. No.: **11/651,890**

(22) Filed: **Jan. 10, 2007**

(51) **Int. Cl.**
G01N 21/00 (2006.01)

(52) **U.S. Cl.** **73/1.06**

(58) **Field of Classification Search** ..... None
See application file for complete search history.

(56) **References Cited**

U.S. PATENT DOCUMENTS

4,264,961 A * 4/1981 Nishimura et al. 702/47
4,735,086 A * 4/1988 Follmer 73/204.19
5,792,952 A * 8/1998 Ritchart 73/204.27
6,649,909 B2 11/2003 Russ, IV et al.
6,672,129 B1 * 1/2004 Frederickson et al. 73/1.06
6,797,947 B2 9/2004 Russ, IV et al.
6,997,051 B2 * 2/2006 Okazaki et al. 73/204.22
7,004,423 B2 * 2/2006 Folsom et al. 244/3.22
7,017,386 B2 * 3/2006 Liu et al. 73/1.03
2004/0261521 A1 * 12/2004 Hecht et al. 73/204.26

OTHER PUBLICATIONS

Robert J. Simonson et al, "Microfabricated Chemical Source Array", U.S. Appl. No. 11/168,246, filed Jun. 27, 2005.

Anna Switaj-Zawadka et al, "Chemically Modified Glas Fiber as a Matrix-Free Reference Material for Volatile Compounds," Analytical Chemistry, vol. 77, No. 9, May 1, 2005, pp. 3018-3020.

* cited by examiner

Primary Examiner — Robert R Raevis

(74) *Attorney, Agent, or Firm* — Carol I. Ashby

(57) **ABSTRACT**

A microfabricated field calibration assembly for use in calibrating analytical instruments and sensor systems. The assembly comprises a circuit board comprising one or more resistively heatable microbridge elements, an interface device that enables addressable heating of the microbridge elements, and, in some embodiments, a means for positioning the circuit board within an inlet structure of an analytical instrument or sensor system.
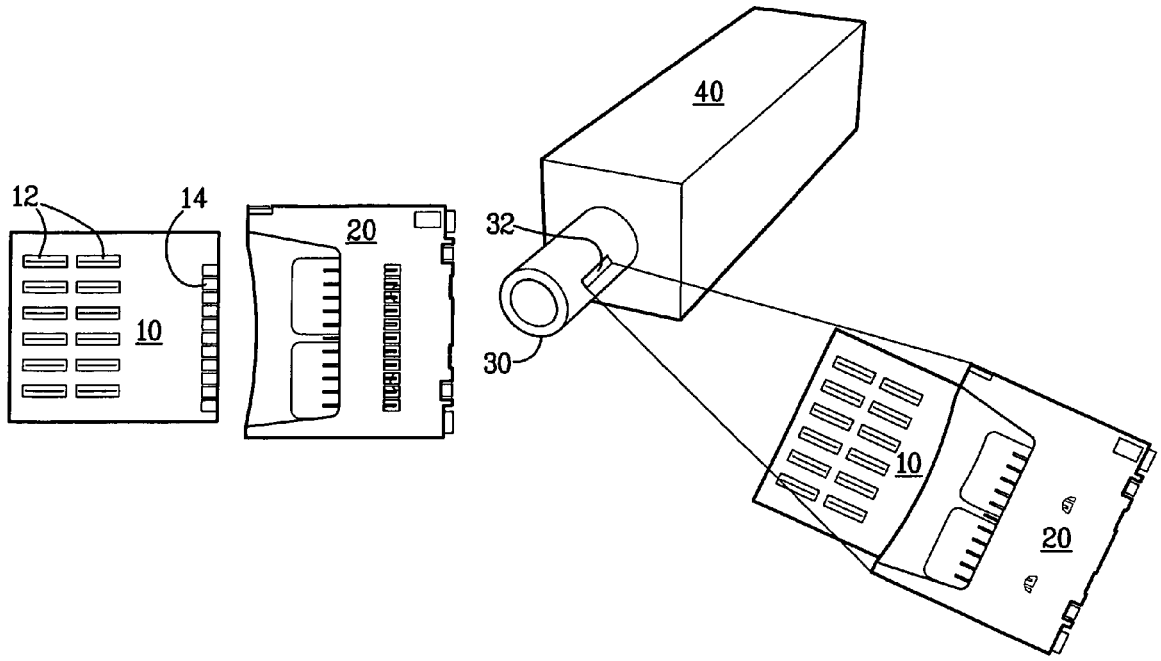
18 Claims, 6 Drawing Sheets