FOUR-WAY VALVE

Filed Dec. 28, 1966 3 Sheets-Sheet 1

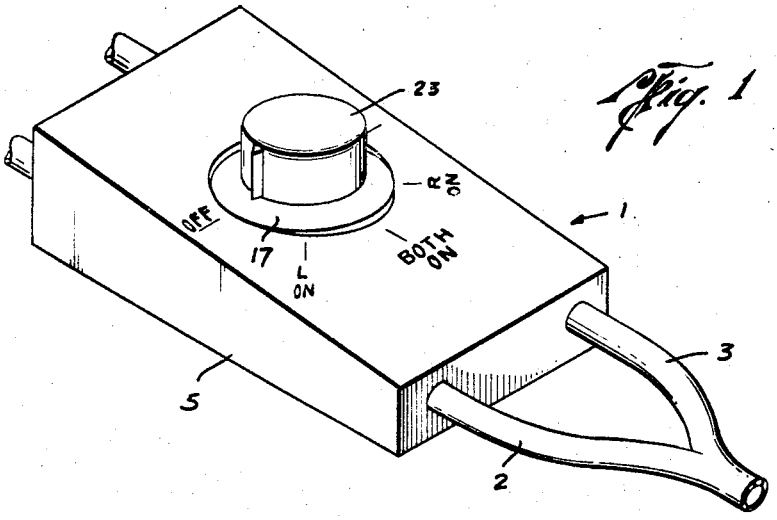

Fig. 1

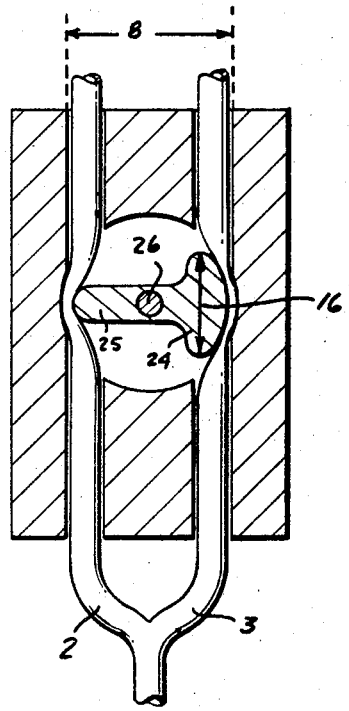

Fig. 2

Fig. 3

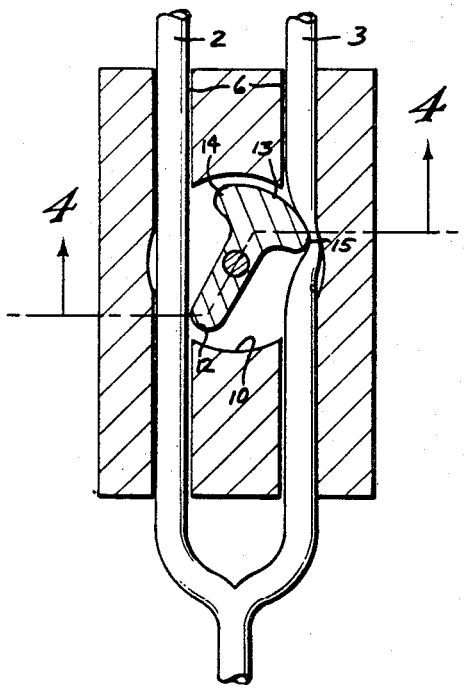

Frank L. Rose
INVENTOR

BY Arnold and Rayfance
ATTORNEYS