US009411334B2

(12) **United States Patent**
D'Alto et al.

(10) **Patent No.: US 9,411,334 B2**
(45) **Date of Patent: Aug. 9, 2016**

(54) **AIRCRAFT GUIDANCE METHOD AND SYSTEM**

(75) Inventors: **Luis P. D'Alto**, Madrid (ES); **Christian Grabow**, Madrid (ES)

(73) Assignee: **The Boeing Company**, Chicago, IL (US)

(*) Notice: Subject to any disclaimer, the term of this patent is extended or adjusted under 35 U.S.C. 154(b) by 749 days.

(21) Appl. No.: **13/595,399**

(22) Filed: **Aug. 27, 2012**

(65) **Prior Publication Data**

US 2013/0082148 A1 Apr. 4, 2013

(30) **Foreign Application Priority Data**

Oct. 4, 2011 (EP) 11382311

(51) **Int. Cl.**
G05D 1/10 (2006.01)
G05D 1/02 (2006.01)
B64C 19/00 (2006.01)

(52) **U.S. Cl.**
CPC ***G05D 1/0202*** (2013.01); ***B64C 19/00*** (2013.01)

(58) **Field of Classification Search**
CPC B64C 19/00; B64C 13/16
USPC ..... 244/175, 177, 194, 195, 76 R
See application file for complete search history.

(56) **References Cited**

U.S. PATENT DOCUMENTS

3,601,588 A * 8/1971 Bristol 700/31
3,793,574 A * 2/1974 Hamel 318/561
3,980,258 A 9/1976 Simeon
4,074,648 A * 2/1978 Reid et al. ..... 114/144 RE
5,406,488 A * 4/1995 Booth 701/1
7,010,398 B2 * 3/2006 Wilkins et al. 701/3

FOREIGN PATENT DOCUMENTS

EP 0036771 A2 9/1981
EP 0471395 A2 2/1992

OTHER PUBLICATIONS

European Search Report dated Jul. 16, 2012 in EP Application No. 11382311.6-1239.

* cited by examiner

Primary Examiner — Brian M O'Hara
Assistant Examiner — Keith L Dixon
(74) *Attorney, Agent, or Firm* — Baldauff IP, LLC; Michael J. Baldauff, Jr.

(57) **ABSTRACT**

A system and method for steering aircraft along a predetermined track is disclosed herein. The system and method relate to steering an aircraft along a lateral path (e.g. a track described by reference to latitude and longitude) by a method comprising: calculating a nominal track correction; providing an upper limit and a lower limit for the nominal track correction; setting a desired track correction as: (i) the nominal track correction if the nominal track is between the upper limit and the lower limit; (ii) the upper limit if the nominal track correction is greater than or equal to the upper limit; or (iii) the lower limit if the nominal track correction is less than or equal to the lower limit; and steering the aircraft using the desired track correction.
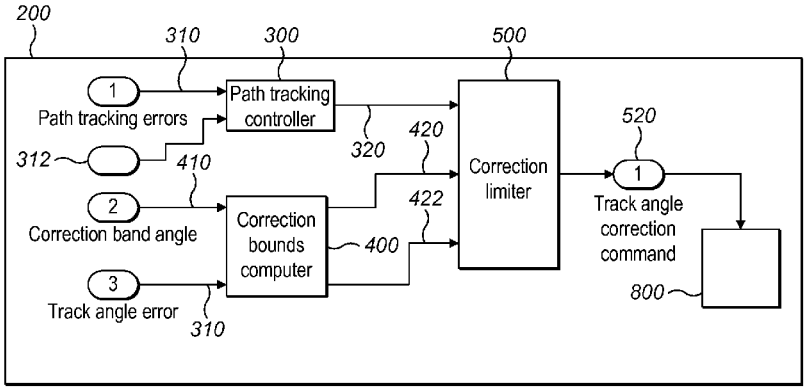
15 Claims, 4 Drawing Sheets