US009410534B2

(12) **United States Patent**
Grieve

(10) **Patent No.: US 9,410,534 B2**
(45) **Date of Patent: Aug. 9, 2016**

(54) **WIND POWERED ELECTRICAL GENERATOR HAVING A VARIABLE SPEED CLUTCH ARRANGEMENT**

(71) Applicant: **Dennis Grieve**, Star, ID (US)

(72) Inventor: **Dennis Grieve**, Star, ID (US)

(*) Notice: Subject to any disclaimer, the term of this patent is extended or adjusted under 35 U.S.C. 154(b) by 27 days.

(21) Appl. No.: **14/207,877**

(22) Filed: **Mar. 13, 2014**

(65) **Prior Publication Data**

US 2014/0265345 A1 Sep. 18, 2014

Related U.S. Application Data

(60) Provisional application No. 61/779,364, filed on Mar. 13, 2013.

(51) **Int. Cl.**
F03D 9/00 (2016.01)
F03D 11/02 (2006.01)

(52) **U.S. Cl.**
CPC ***F03D 11/02*** (2013.01); *F05B 2260/4021* (2013.01); *F05B 2260/4023* (2013.01); *Y02E 10/722* (2013.01)

(58) **Field of Classification Search**
CPC ... F03D 5/02; F03D 11/02; F05B 2260/4021; F05B 2260/4023
USPC ..... 290/44, 55; 415/4.2, 4.1, 2.1; 416/132 B
See application file for complete search history.

(56) **References Cited**

U.S. PATENT DOCUMENTS

2,058,500	A *	10/1936	Plucker	290/55
2,403,564	A *	7/1946	Stein	290/44
4,186,314	A *	1/1980	Diggs	290/55
4,204,126	A *	5/1980	Diggs	290/55
4,229,661	A *	10/1980	Mead et al.	290/44
4,585,950	A *	4/1986	Lund	290/44
4,613,763	A *	9/1986	Swansen	290/44
4,757,211	A *	7/1988	Kristensen	290/55
5,137,417	A *	8/1992	Lund	415/4.1
5,140,856	A *	8/1992	Larsen	73/455
6,856,042	B1 *	2/2005	Kubota	290/55
7,323,792	B2 *	1/2008	Sohn	290/55
8,851,839	B2 *	10/2014	Eckart	416/9
8,912,681	B1 *	12/2014	Filkins	290/55
2008/0272596	A1 *	11/2008	House	290/44
2012/0068466	A1 *	3/2012	Gilbert	290/55
2012/0292913	A1 *	11/2012	Turck	290/55

* cited by examiner

Primary Examiner — Julio C. Gonzalez R.
(74) *Attorney, Agent, or Firm* — James Ray and Assocs

(57) **ABSTRACT**

The invention provides an apparatus configured to convert kinetic energy of wind flow into electric energy. The apparatus includes a mast, a primary electric generator mounted on the mast, a secondary electric generator mounted on the mast in a tandem arrangement with the primary electric generator, blades affixed to a rotor shaft of the primary electric generator, a driving clutch affixed to the rotor shaft of the primary electric generator, a driven clutch affixed to a rotor shaft of the secondary electric generator, and endless elongated member connecting the driving clutch with the driven clutch. The apparatus is configured to convert a kinetic energy of a wind flow into an electric energy at one or both of the primary and secondary electric generators.
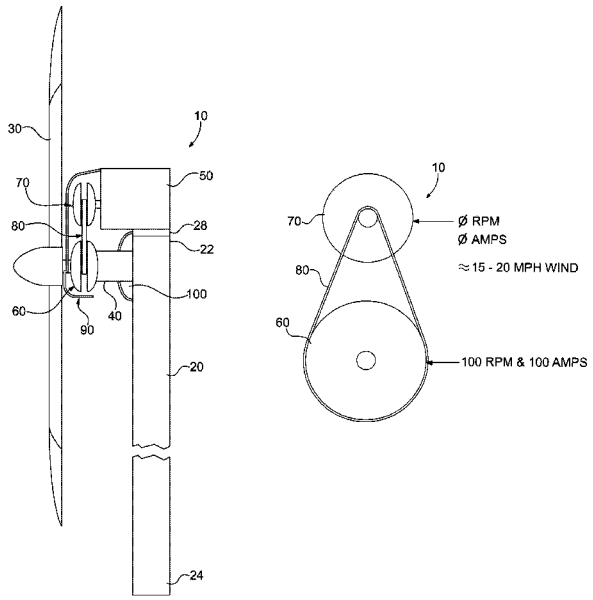
19 Claims, 6 Drawing Sheets