US009409134B1

(12) **United States Patent**
Jones et al.

(10) **Patent No.: US 9,409,134 B1**
(45) **Date of Patent: Aug. 9, 2016**

(54) **EDUCTOR WITH BACKFLOW DEFLECTOR**

(71) Applicant: **Diversey, Inc.**, Duncan, SC (US)

(72) Inventors: **Gareth Jones**, Amsterdam (NL); **Ian Sansom**, Amsterdam (NL); **Marcel van der Kraan**, Rotterdam (NL); **Seth Haanstra**, Vinkeveen (NL); **Richard Wenborn**, Utrecht (NL)

(73) Assignee: **Diversey, Inc.**, Charlotte, NC (US)

(*) Notice: Subject to any disclaimer, the term of this patent is extended or adjusted under 35 U.S.C. 154(b) by 0 days.

(21) Appl. No.: **14/662,720**

(22) Filed: **Mar. 19, 2015**

(51) **Int. Cl.**

B05B 7/30	(2006.01)
B01F 5/04	(2006.01)
B01F 3/04	(2006.01)
B01F 3/08	(2006.01)
E03C 1/10	(2006.01)
B05B 7/24	(2006.01)

(52) **U.S. Cl.**
CPC ***B01F 5/0415*** (2013.01); ***B01F 3/0446*** (2013.01); ***B01F 3/0865*** (2013.01); ***B01F 5/0413*** (2013.01); ***B05B 7/2443*** (2013.01); ***E03C 1/10*** (2013.01); *B01F 2005/0443* (2013.01)

(58) **Field of Classification Search**
CPC B01F 5/0415; B01F 3/0446; B01F 5/0413; B01F 3/0865; B01F 2005/0443; E03C 1/10; B05B 7/2443
USPC 239/310, 318; 137/890, 888, 889, 896, 137/216
See application file for complete search history.

(56) **References Cited**

U.S. PATENT DOCUMENTS

5,673,725	A *	10/1997	Russell	B01F 5/0413	137/216
5,839,474	A *	11/1998	Greaney	B01F 5/0077	137/889
5,862,829	A *	1/1999	Sand	A47L 15/4427	137/888
7,566,013	B2 *	7/2009	MacLean-Blevins	B05B 7/12	239/310
2006/0032543	A1 *	2/2006	Hague	A47L 15/4427	137/888
2006/0260704	A1 *	11/2006	Sand	B01F 3/0861	137/890

* cited by examiner

Primary Examiner — Steven J Ganey
(74) *Attorney, Agent, or Firm* — Rupert B Hurtey, Jr.

(57) **ABSTRACT**

Air gap eductor with backflow deflector deflects backflowing liquid, preventing backflowing liquid from contaminating water supply by contacting water jet nozzle above air gap. Backflow deflector plate blocks 40-80% of rim area at opening at upper end of eductor discharge tube, leaving 60-20% of rim area unblocked. With bifurcated asymmetry of from 40% to 100%, blocked and unblocked rim areas deflect backflowing liquid laterally, away from water jet nozzle.
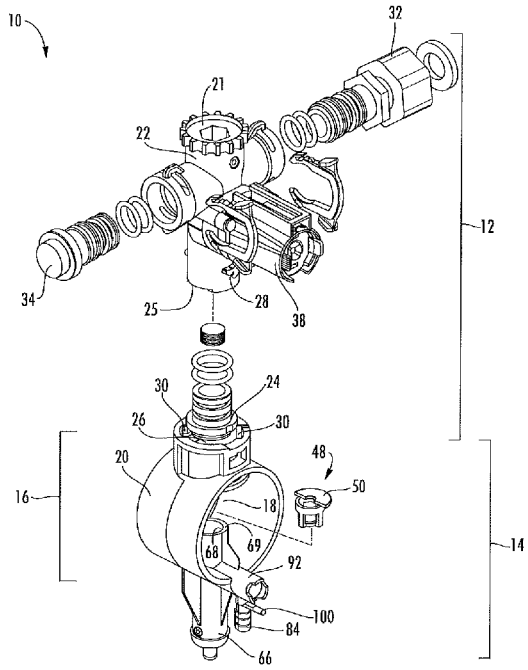
19 Claims, 12 Drawing Sheets