US009409034B2

(12) **United States Patent**
Babaeizadeh et al.

(10) **Patent No.: US 9,409,034 B2**
(45) **Date of Patent: Aug. 9, 2016**

(54) **SYSTEM, METHOD AND APPARATUS FOR ANALYZING CARDIAC RHYTHM DURING CPR**

(71) Applicant: **KONINKLIJKE PHILIPS N.V.**, Eindhoven (NL)

(72) Inventors: **Saeed Babaeizadeh**, Arlington, MA (US); **Sophia Huai Zhou**, Briarcliff Manor, NY (US)

(73) Assignee: **Koninklijke Philips N.V.**, Eindhoven (NL)

(*) Notice: Subject to any disclaimer, the term of this patent is extended or adjusted under 35 U.S.C. 154(b) by 0 days.

(21) Appl. No.: **14/404,040**

(22) PCT Filed: **May 29, 2013**

(86) PCT No.: **PCT/IB2013/054426**

§ 371 (c)(1),
(2) Date: **Nov. 26, 2014**

(87) PCT Pub. No.: **WO2013/179234**

PCT Pub. Date: **Dec. 5, 2013**

(65) **Prior Publication Data**

US 2015/0165223 A1 Jun. 18, 2015

Related U.S. Application Data

(60) Provisional application No. 61/654,143, filed on Jun. 1, 2012.

(51) **Int. Cl.**

A61N 1/00	(2006.01)
A61N 1/39	(2006.01)
A61B 5/00	(2006.01)
A61B 5/04	(2006.01)
A61B 5/0464	(2006.01)

(52) **U.S. Cl.**
CPC ***A61N 1/3987*** (2013.01); ***A61B 5/04012*** (2013.01); ***A61B 5/0464*** (2013.01); ***A61B 5/7217*** (2013.01); ***A61N 1/39*** (2013.01); ***A61N 1/3925*** (2013.01)

(58) **Field of Classification Search**
USPC 607/7
See application file for complete search history.

(56) **References Cited**

U.S. PATENT DOCUMENTS

7,567,837	B2	7/2009	Well et al.
2006/0025824	A1	2/2006	Freeman et al.

(Continued)

FOREIGN PATENT DOCUMENTS

GB	2370880	A	12/2004
WO	2006015348	A2	2/2006
WO	2011040929	A1	4/2011

OTHER PUBLICATIONS

Eilevstjonn, J. et al. "Feasibility of shock advice analysis during CPR through removal of CPR artefa from the human ECG". Resuscitation, May 2006; 61(2):131-41.

(Continued)

Primary Examiner — Nicole F Lavert

(57) **ABSTRACT**

A diagnostic medical device for identifying an arrhythmia treatable by a defibrillation shock includes a defibrillating a filter for filtering ECG data sets, a classifier and a electrotherapy circuit. The classifier is configured to classify filtered and unfiltered ECG data sets as a "shock" advice or a "no-shock" advice.
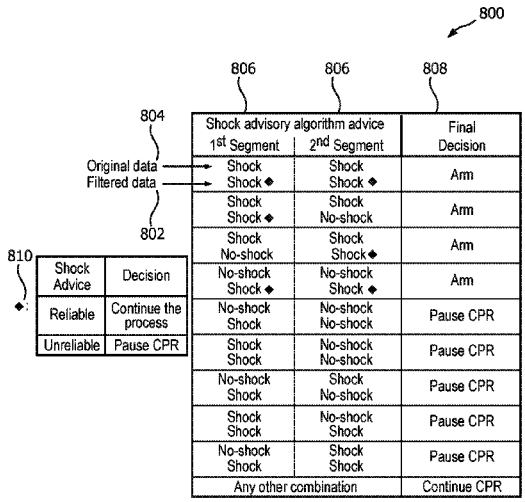
27 Claims, 8 Drawing Sheets