United States Patent [19]

Hubbard

[11] **4,290,233**

[45] **Sep. 22, 1981**

[54] **SAFETY DOOR ENTRANCE**

[75] Inventor: **S. Eugene Hubbard,** Niles, Mich.

[73] Assignee: **Kawneer Company, Inc.,** Niles, Mich.

[21] Appl. No.: **70,432**

[22] Filed: **Aug. 28, 1979**

[51] **Int. Cl.**[3] **E06B 7/16**

[52] **U.S. Cl.** **49/383;** 52/207

[58] **Field of Search** 49/383, 485; 160/229, 160/235; 52/207, 206, 210, 397

[56] **References Cited**

U.S. PATENT DOCUMENTS

1,925,817	9/1933	Plym	49/383
2,557,716	6/1951	Allee .	
2,960,733	11/1960	Nida	49/383 X
3,308,582	3/1967	Bakke	49/383
3,319,697	5/1967	Krohn	49/383 X
3,774,360	11/1973	Hubbard et al.	52/207 X
3,941,180	3/1976	Thill	49/383 X
4,157,634	6/1979	Coulston	49/485

FOREIGN PATENT DOCUMENTS

2725159	12/1978	Fed. Rep. of Germany	49/383

Primary Examiner—Philip C. Kannan

Attorney, Agent, or Firm—Mason, Kolehmainen, Rathburn & Wyss

[57] **ABSTRACT**

A safety door entrance includes a door mounted for swinging movement on hinges connected to a door jamb and a finger protector for continuously bridging a gap formed between the door heel and adjacent jamb as the door swings open and closed. The protector prevents a person's fingers, toes or other objects from accidentally being inserted in the gap and subject to damage when the door swings closed.
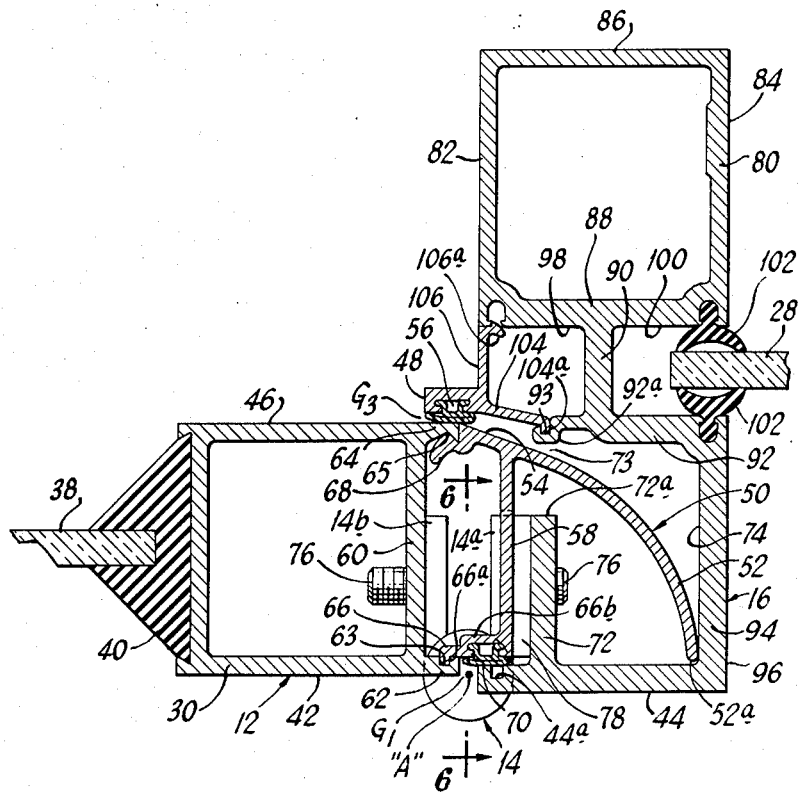
24 Claims, 7 Drawing Figures