US005181933A

United States Patent [19]

Phillips

[11] **Patent Number: 5,181,933**

[45] **Date of Patent: Jan. 26, 1993**

[54] **SPLIT FOOT PROSTHESIS**

[76] Inventor: **Van L. Phillips,** 5499 Avenida Maravillas, Rancho Santa Fe, Calif. 92067

[21] Appl. No.: **662,928**

[22] Filed: **Feb. 28, 1991**

[51] **Int. Cl.**[5] **A61F 2/66**

[52] **U.S. Cl.** **623/55;** 623/52

[58] **Field of Search** 623/53-56, 623/27, 47-56

[56] **References Cited**

U.S. PATENT DOCUMENTS

65,187	5/1867	Emery	623/52
951,989	3/1910	Hanger	623/56
2,036,830	4/1936	Rowley	623/54
2,197,093	4/1940	Campbell	623/56
2,475,372	7/1949	Catranis	623/54 X
4,547,913	10/1985	Phillips	623/53 X
4,645,509	2/1987	Poggi et al.	623/55
4,676,801	6/1987	Lundeen	623/53
4,822,363	4/1989	Phillips	623/27
4,938,776	7/1990	Masinter	623/49

FOREIGN PATENT DOCUMENTS

0325171	9/1920	Fed. Rep. of Germany	623/53
0963849	5/1957	Fed. Rep. of Germany	623/27
1498490	8/1989	U.S.S.R.	623/53
0306313	2/1929	United Kingdom	623/53
8905617	6/1989	World Int. Prop. O.	623/53

Primary Examiner—Randy C. Shay
Assistant Examiner—D. Willse
Attorney, Agent, or Firm—J. Mark Holland; Thomas P. Mahoney

[57] **ABSTRACT**

A prosthetic foot is characterized by an attachment section and plurality of curvilinear foot portions extending downwardly from the attachment section to contact a supporting surface. The portions are capable of movement independent from one another. Preferably, the plurality of foot portions is fabricated by dividing a forefoot portion and a heel portion demountably attached thereto. Such division may be achieved by the provision of a slot in said forefoot and heel portions. A strap or similar expedient is provided to limit the movement of the foot portions relative to each other.
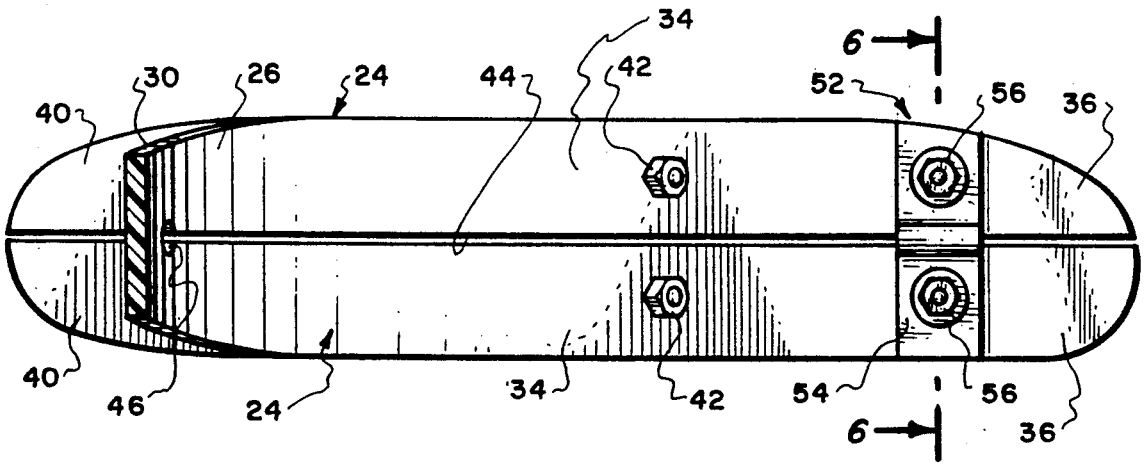
20 Claims, 2 Drawing Sheets