May 18, 1971 D. A. DAHLGREN 3,579,433

VERTICAL COLUMN ELECTROPHORESIS APPARATUS

Filed April 24, 1968

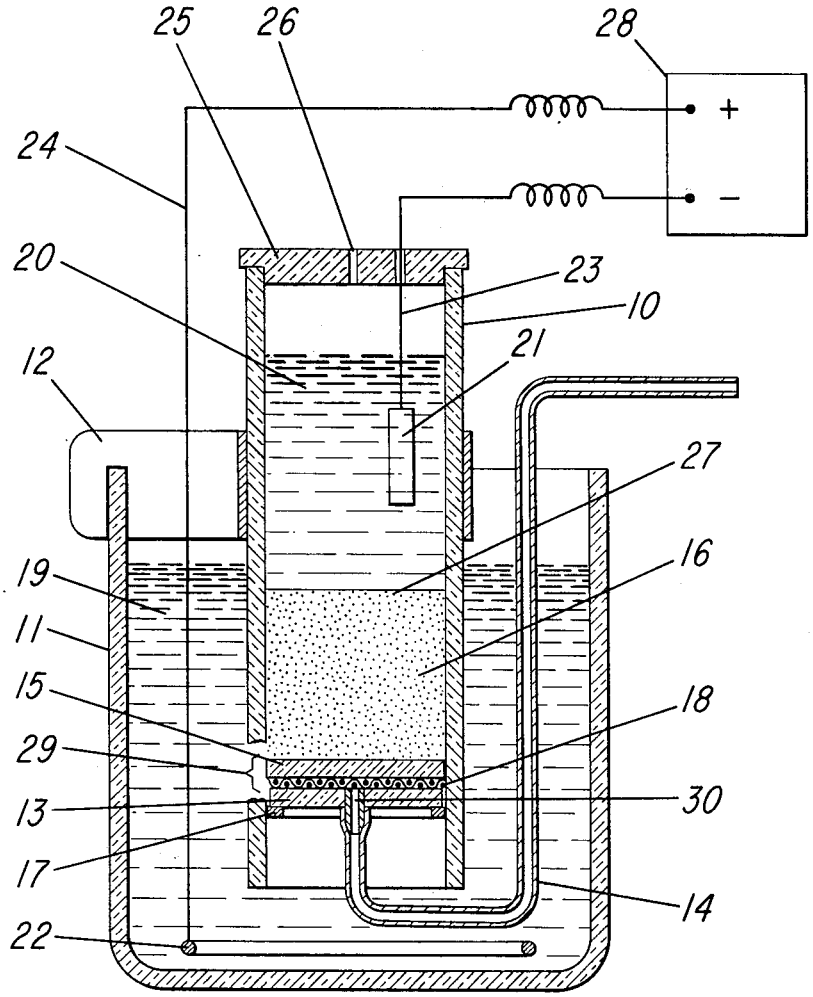


INVENTOR.
DONALD A. DAHLGREN
BY
Talivaldis Cepuritis
ATTORNEY