(No Model.)

G. W. GLAZIER.

DOOR GUARD.

No. 474,633. Patented May 10, 1892.

Fig. 1.

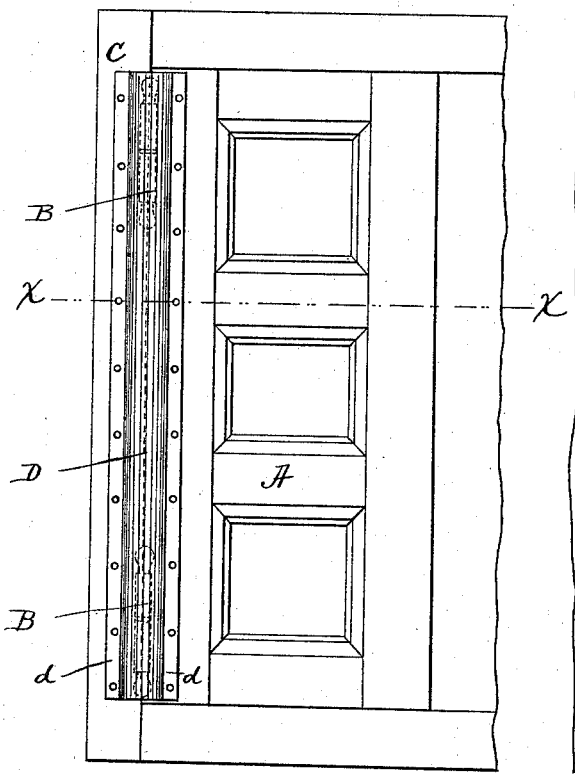

Fig. 2.

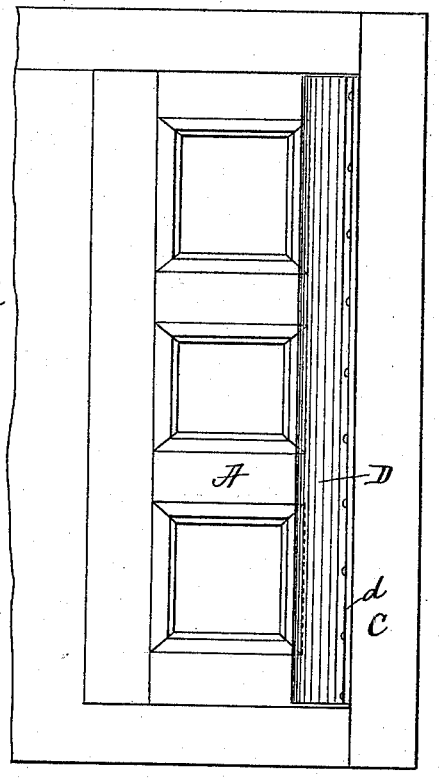

Fig. 3.

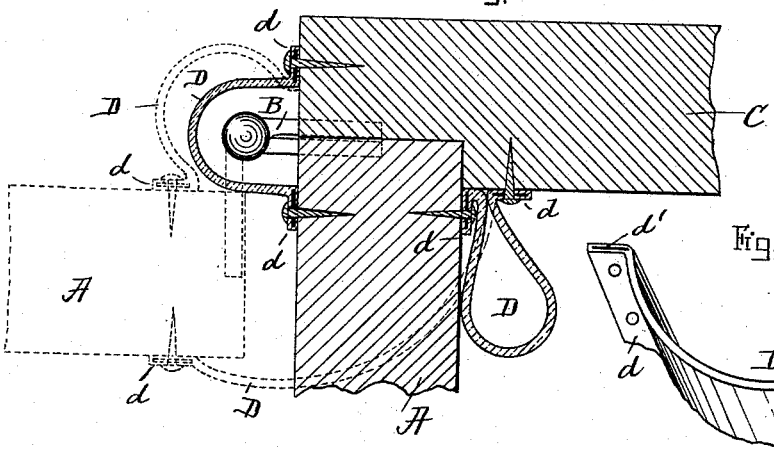

Fig. 4.

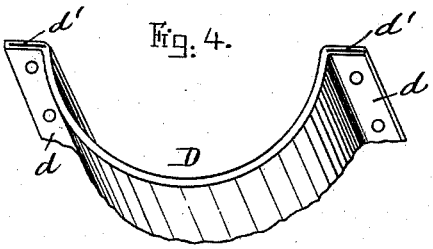

Witnesses.

Laurits N. Møller

Alice A. Perkins

Inventor.

George W. Glazier

by Albert Andrén

his atty.

THE NORRIS PETERS CO., PHOTO-LITHO., WASHINGTON, D. C.