US005959833A

United States Patent [19]

Youens

[11] **Patent Number: 5,959,833**

[45] **Date of Patent: Sep. 28, 1999**

[54] **PORTABLE COMPUTER WITH REVERSE DRAFT ON FRONT SIDE EDGE PORTION OF DISPLAY HOUSING**

[75] Inventor: **John E. Youens**, Magnolia, Tex.

[73] Assignee: **Compaq Computer Corporation**, Houston, Tex.

[21] Appl. No.: **08/884,565**

[22] Filed: **Jun. 27, 1997**

[51] **Int. Cl.**[6] **G06F 1/16**; H05K 5/02

[52] **U.S. Cl.** **361/681**; 361/683; D14/113

[58] **Field of Search** 361/679, 681, 361/683; D14/100, 102, 104, 106, 113; 364/708.1; 248/917, 919, 923

[56] **References Cited**

U.S. PATENT DOCUMENTS

D. 364,387	11/1995	Chiba et al.	D14/106
D. 366,251	1/1996	Rak et al.	D14/106
D. 368,468	4/1996	Kobayashi	D14/100
D. 371,767	7/1996	Faranda et al.	D14/106
5,724,224	3/1998	Howell et al.	361/680

Primary Examiner—Leo P. Picaro
Assistant Examiner—Jayprakash N. Gandhi
Attorney, Agent, or Firm—Konneker & Smith, P.C.

[57] **ABSTRACT**

The front side edge of the display lid portion of a notebook computer has a relatively shallow reverse draft angle of approximately five to fifteen degrees thereon and, with the display lid in its downwardly pivoted closed position on the computer's base housing, is rearwardly offset from the front side of the base housing in a manner exposing a relatively narrow front top side surface portion of the base housing. Because of the slight undercut in its front side edge resulting from the reverse draft thereon, the grasping of the front side edge, to upwardly pivot the display lid from its closed position to its open use orientation, is made appreciably easier. Additionally, when the closed computer is viewed from its front side the rearward and downward slope of the front side edge of the lid creates a shadow thereon which serves to highlight the exposed front top side surface portion of the base housing and give the overall housing structure the desirable appearance of being vertically thinner than it actually is. LCD operating lights are placed on the exposed front top side portion of the base housing and are thus visible to the user even when the display lid in its closed orientation.
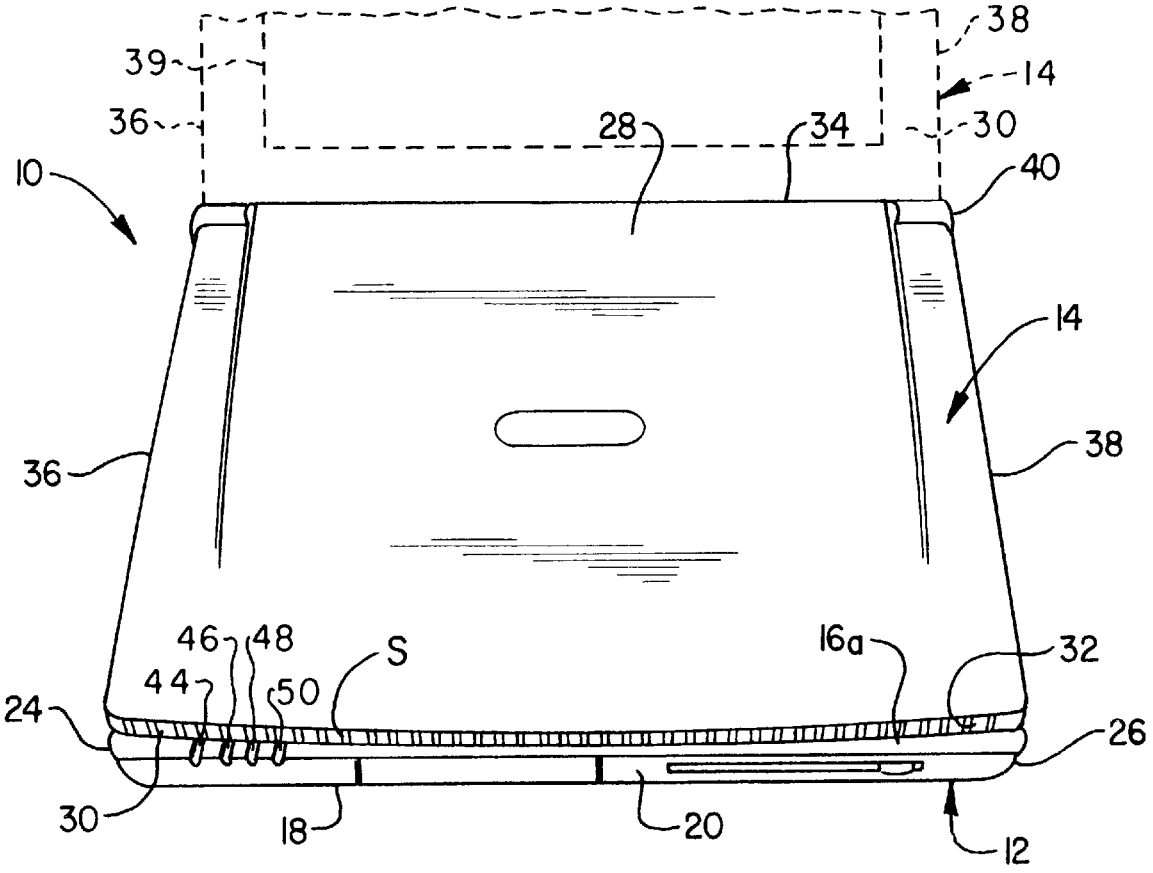
12 Claims, 1 Drawing Sheet