Jan. 30, 1951 A. W. MORRILL 2,539,633

DEVICE FOR BREEDING INSECTS

Filed Sept. 11, 1946

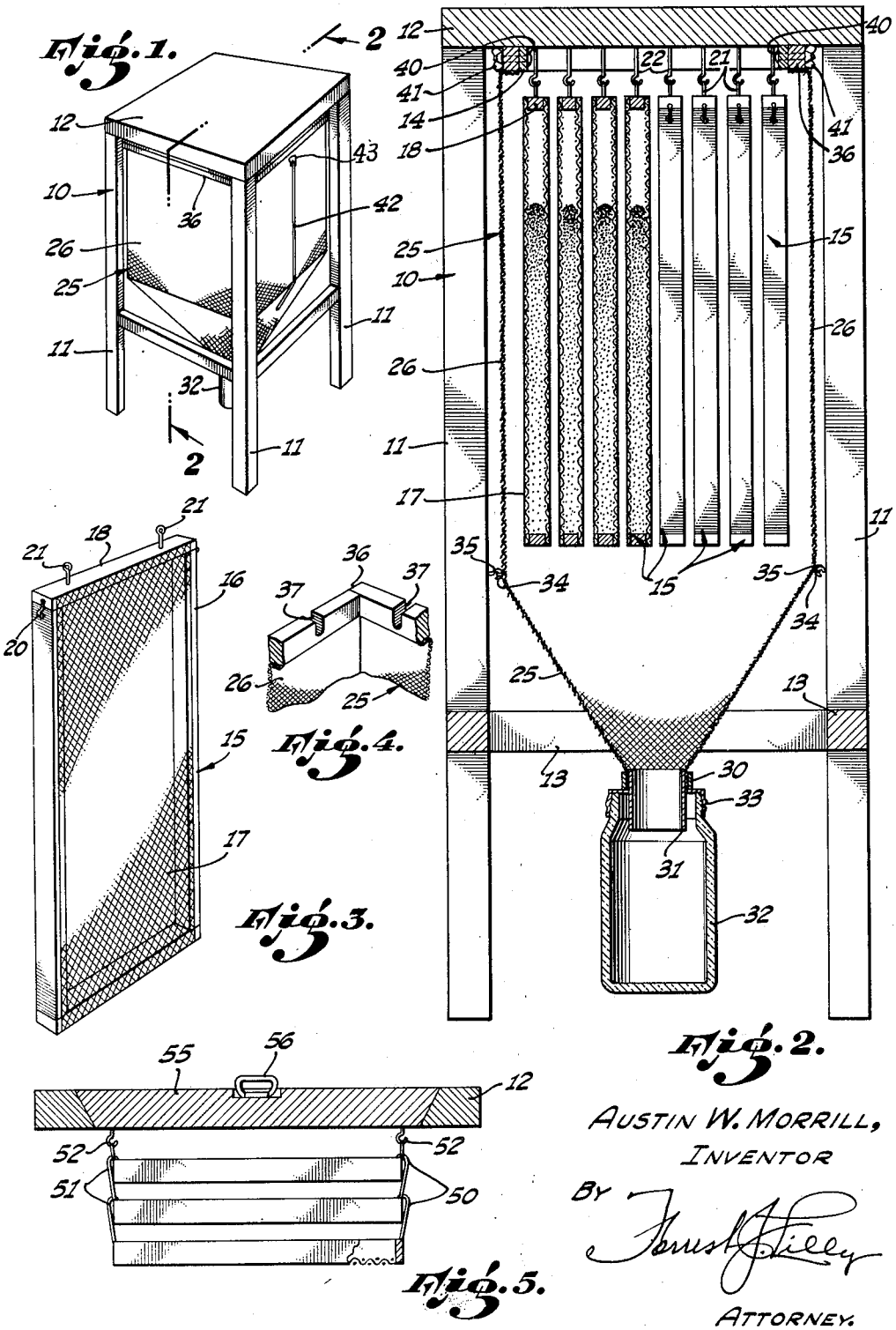

AUSTIN W. MORRILL,
INVENTOR

BY Forrest J. Lilly

ATTORNEY.