Oct. 13, 1970 L. STRAUCH 3,533,933

PROCESS AND DEVICE FOR THE ISOLATION OF FRACTIONS OF A SUBSTANCE MIXTURE ELECTROPHORETICALLY SEPARATED IN A CARRIER GEL

Filed April 1, 1968 2 Sheets-Sheet 1

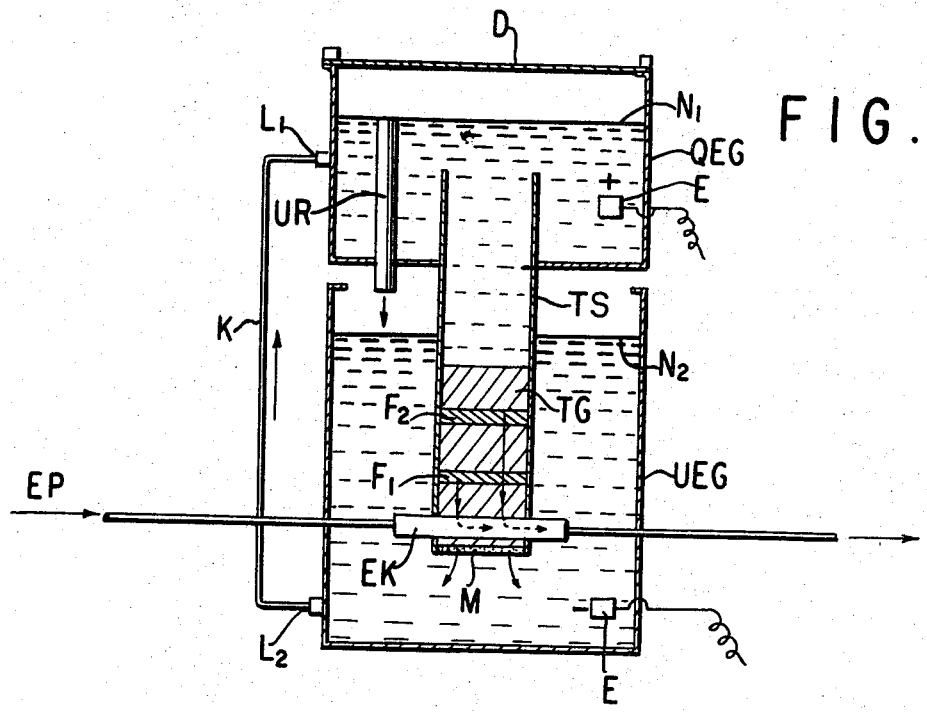

FIG. 1

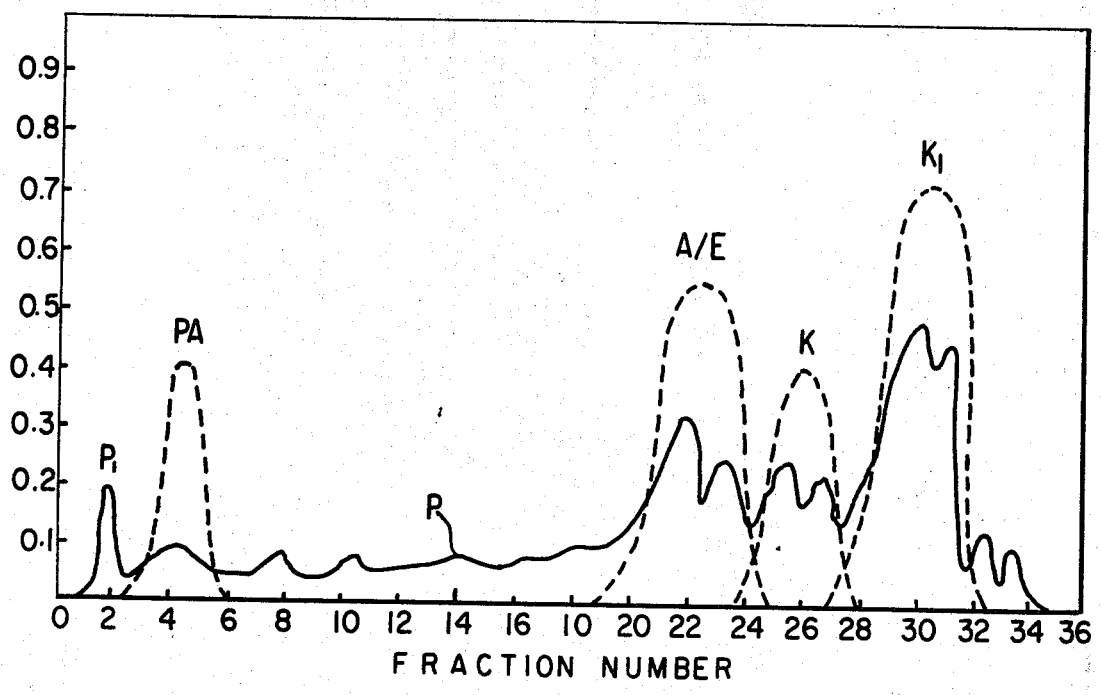

FIG. 3

INVENTOR
LUDWIG STRAUCH
BY
Hammond and Littell
ATTORNEYS