June 30, 1970 R. M. ANDERSON 3,518,033

EXTRACORPOREAL HEART

Filed Aug. 22, 1969 6 Sheets-Sheet 1

FIG. 1.

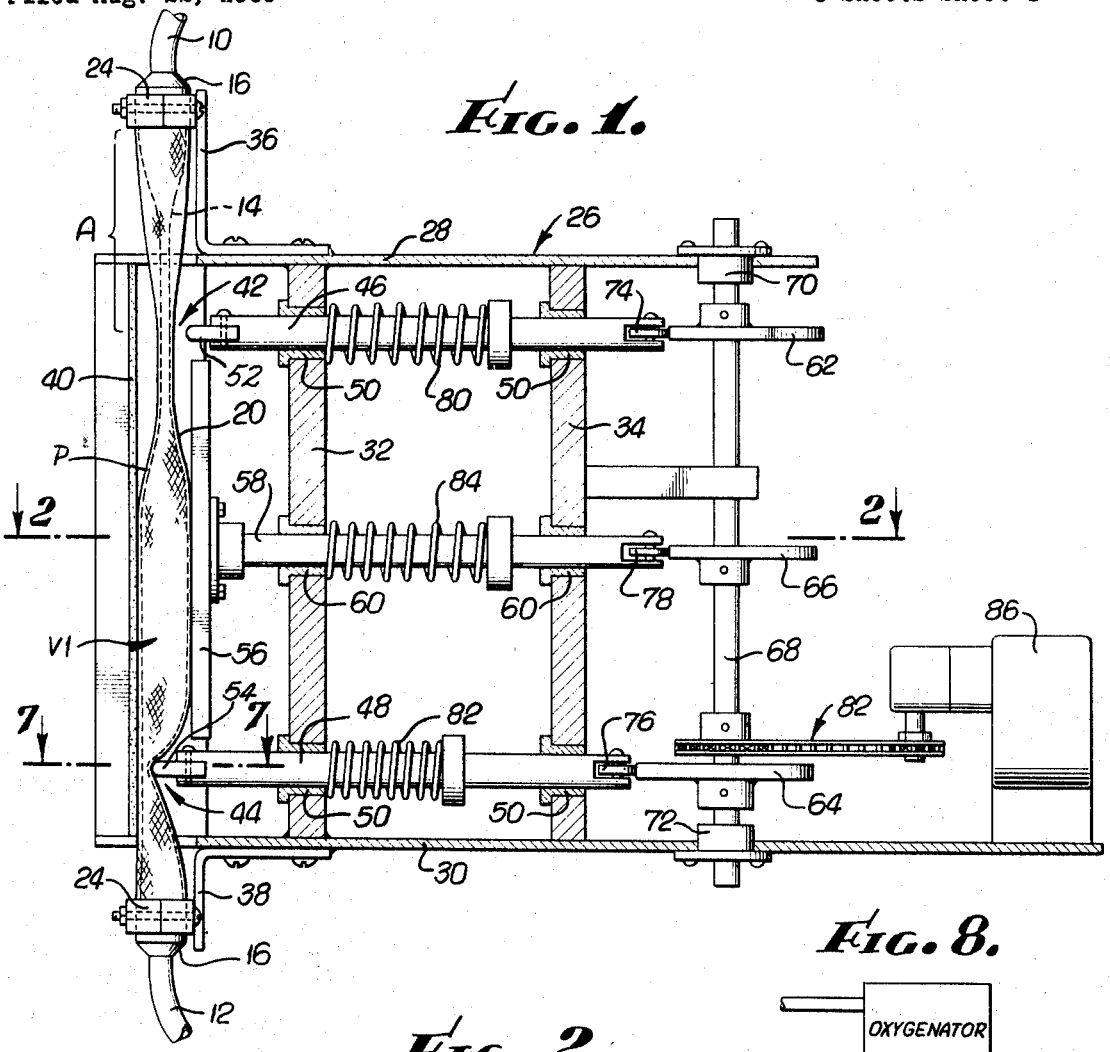

FIG. 8.

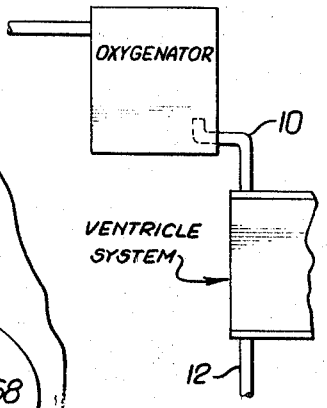

FIG. 2.

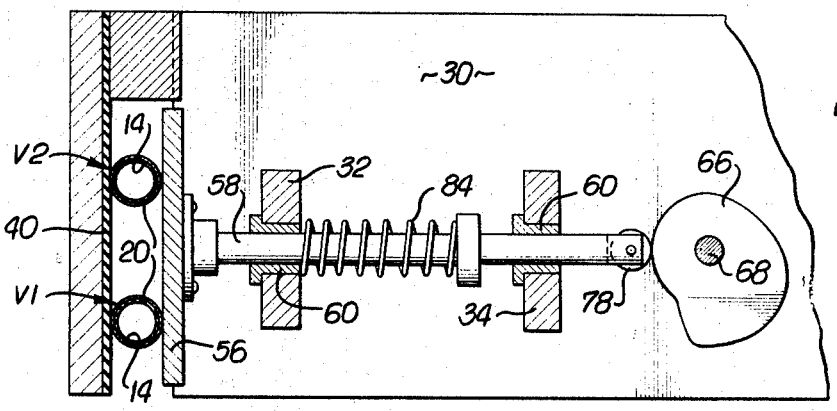

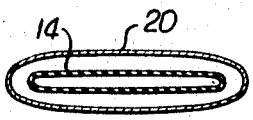

FIG. 7a.

INVENTOR.
ROBERT M. ANDERSON
BY
Flam and Flam
ATTORNEYS.