US009409433B2

(12) **United States Patent**
Carreras

(10) **Patent No.: US 9,409,433 B2**
(45) **Date of Patent: Aug. 9, 2016**

(54) **PRINTING PROCESS USING SOFT PHOTOPOLYMER PLATES**

(71) Applicant: **Ball Corporation**, Broomfield, CO (US)

(72) Inventor: **Chris Carreras**, Erie, CO (US)

(73) Assignee: **Ball Corporation**, Broomfield, CO (US)

(*) Notice: Subject to any disclaimer, the term of this patent is extended or adjusted under 35 U.S.C. 154(b) by 0 days.

(21) Appl. No.: **14/301,018**

(22) Filed: **Jun. 10, 2014**

(65) **Prior Publication Data**

US 2014/0360394 A1 Dec. 11, 2014

Related U.S. Application Data

(60) Provisional application No. 61/833,799, filed on Jun. 11, 2013.

(51) **Int. Cl.**

B41F 1/18	(2006.01)
B41N 1/00	(2006.01)
B41F 7/16	(2006.01)
B41F 17/08	(2006.01)
B41M 1/40	(2006.01)

(52) **U.S. Cl.**

CPC . ***B41N 1/006*** (2013.01); ***B41F 7/16*** (2013.01); ***B41F 17/08*** (2013.01); ***B41M 1/40*** (2013.01)

(58) **Field of Classification Search**

CPC B41M 1/40
USPC 101/450.1
See application file for complete search history.

(56) **References Cited**

U.S. PATENT DOCUMENTS

3,766,851	A		10/1973	Sirvet et al.
3,991,673	A		11/1976	Coale et al.
4,142,462	A	*	3/1979	Gilgore 101/38.1
4,384,518	A		5/1983	Albin
4,395,946	A		8/1983	Price
4,519,310	A	*	5/1985	Shimizu et al. 101/35
4,884,504	A		12/1989	Sillars
4,889,560	A		12/1989	Jaeger et al.
4,898,752	A		2/1990	Cavagna et al.
4,903,599	A		2/1990	Kubler et al.
5,010,814	A	*	4/1991	Shishikura 101/211
5,049,432	A		9/1991	Ooms et al.
5,181,471	A		1/1993	Sillars
5,213,043	A	*	5/1993	Reimers G03F 1/68 101/463.1

(Continued)

FOREIGN PATENT DOCUMENTS

DE	102006025897	1/2007
EP	202928	11/1986

(Continued)

OTHER PUBLICATIONS

Bodwell et al., "Advancing Flexography: The Technical Path Forward," DuPont, 2011, retrieved from www2.dupont.com/Packaging_Graphics/en_US/assets/downloads/pdf/AdvFlexo_Brochure.pdf, 12 pages.

(Continued)

Primary Examiner — Anthony Nguyen
(74) *Attorney, Agent, or Firm* — Sheridan Ross P.C.

(57) **ABSTRACT**

The present invention relates to using soft photopolymer plates in a printing process, and more specifically, to an apparatus and methods of using soft photopolymer materials to decorate an exterior surface of cylindrical metallic containers with high definition graphics and other indicia.
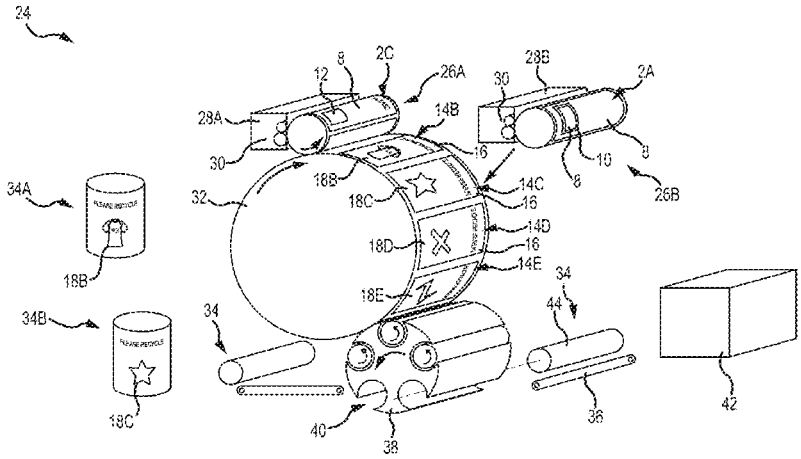
22 Claims, 10 Drawing Sheets