July 23, 1963 A. M. BROWN 3,098,232

SURGICAL CLIP APPLICATOR

Filed Feb. 24, 1960 3 Sheets-Sheet 1

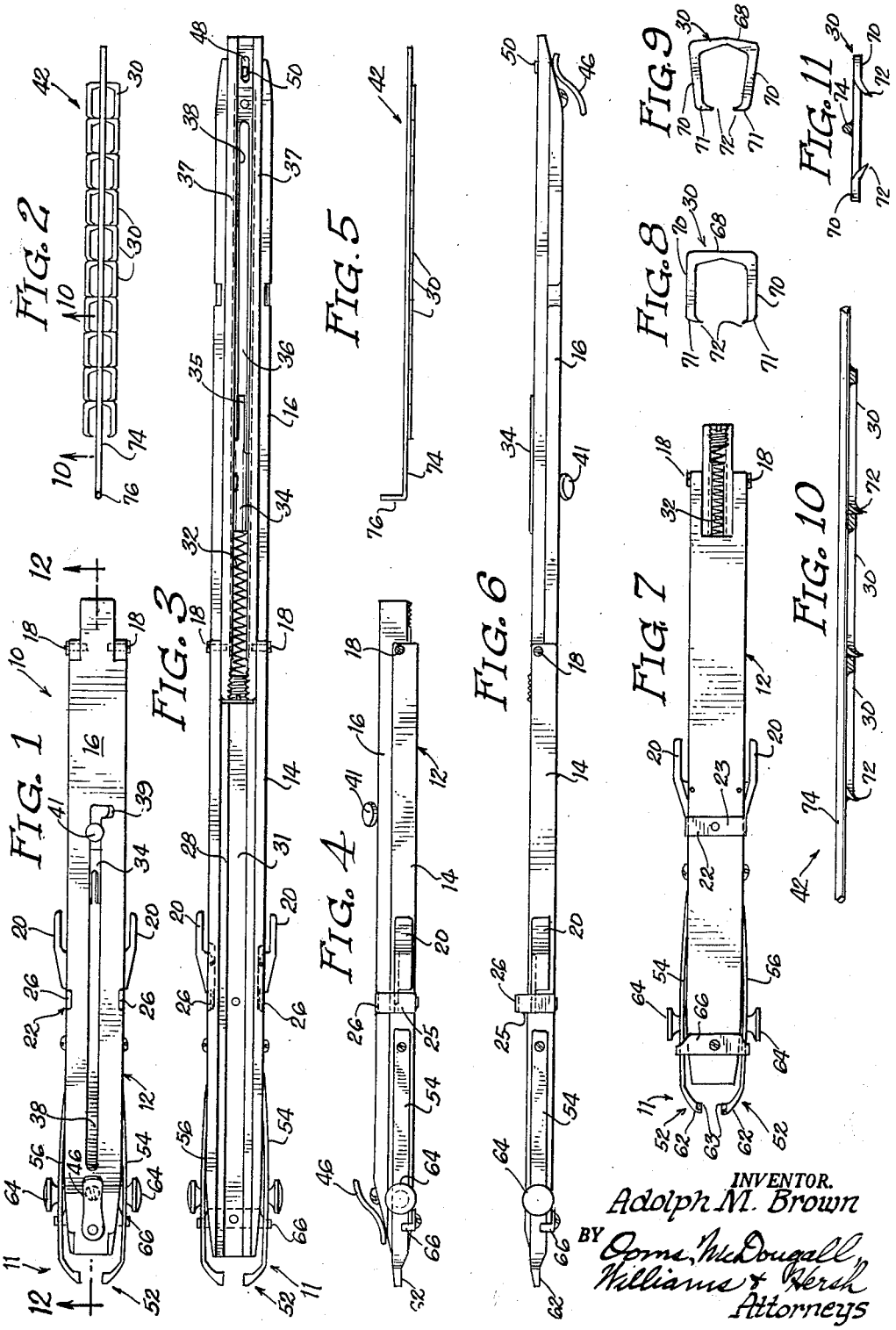

INVENTOR.
Adolph M. Brown
BY Oppenheimer, McDougall, Williams & Hersh
Attorneys