United States Patent [19]

Pilie et al.

[11] **3,889,532**

[45] **June 17, 1975**

[54] **FOG WATER COLLECTOR**

[75] Inventors: **Roland J. Pilie,** Williamsville; **Eugene J. Mack,** Alden, both of N.Y.

[73] Assignee: **The United States of America as represented by the Secretary of the Navy,** Washington, D.C.

[22] Filed: **Aug. 28, 1974**

[21] Appl. No.: **501,306**

[52] **U.S. Cl.** ..... **73/170 R;** 73/421.5 R
[51] **Int. Cl.**[2] **G01W 1/00**
[58] **Field of Search** ..... 73/171, 29, 421.5 R, 335, 73/170 R; 239/14

[56] **References Cited**

UNITED STATES PATENTS

3,534,907	10/1970	Bellis	239/14
3,681,973	8/1972	Ludwig	73/421.5 R
3,826,135	7/1974	Hollmann	73/171

Primary Examiner—Donald O. Woodiel
Assistant Examiner—Marcus S. Rasco
Attorney, Agent, or Firm—R. S. Sciascia; P. Schneider; W. S. Sheehan

[57] **ABSTRACT**

Apparatus for collecting fog water consists of a slotted stainless steel rotatable tube. The tube is rotated and fog droplets are collected by impaction on the tube. Centrifugal force causes the water to flow outward toward the ends of the tube where it is collected in small vials.
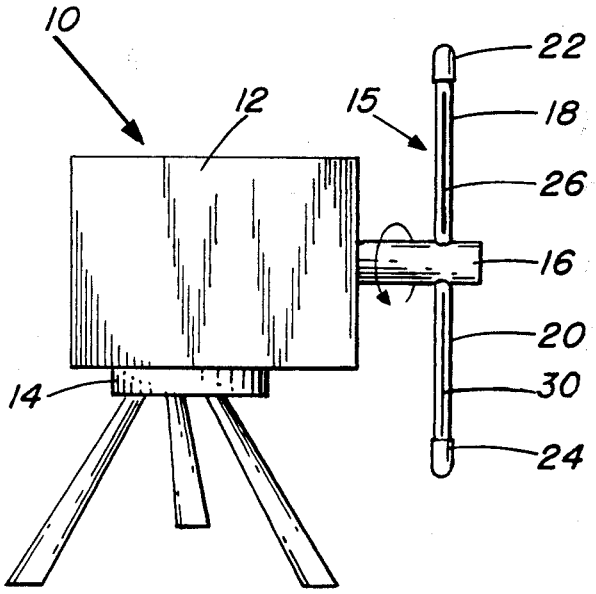
6 Claims, 2 Drawing Figures