US007687432B2

(12) **United States Patent**
Zhou et al.

(10) **Patent No.: US 7,687,432 B2**
(45) **Date of Patent: Mar. 30, 2010**

(54) **MESH-ADJUSTABLE MOLECULAR SIEVE**

(75) Inventors: **Hong-Cai Zhou**, Oxford, OH (US); **Shengqian Ma**, Oxford, OH (US)

(73) Assignee: **Miami University**, Oxford, OH (US)

(*) Notice: Subject to any disclaimer, the term of this patent is extended or adjusted under 35 U.S.C. 154(b) by 400 days.

(21) Appl. No.: **11/738,730**

(22) Filed: **Apr. 23, 2007**

(65) **Prior Publication Data**

US 2008/0184883 A1 Aug. 7, 2008

Related U.S. Application Data

(60) Provisional application No. 60/899,115, filed on Feb. 2, 2007.

(51) **Int. Cl.**
B01D 53/02 (2006.01)
B01J 20/22 (2006.01)

(52) **U.S. Cl.** **502/401**; 556/1

(58) **Field of Classification Search** 96/108; 95/90, 902; 556/1, 27, 170; 502/401, 526
See application file for complete search history.

(56) **References Cited**

U.S. PATENT DOCUMENTS

6,930,193	B2	8/2005	Yaghi et al.
2004/0225134	A1	11/2004	Yaghi et al.
2006/0057057	A1	3/2006	Muller et al.
2006/0185388	A1	8/2006	Muller et al.
2006/0210458	A1	9/2006	Mueller et al.
2006/0252641	A1	11/2006	Yaghi et al.

OTHER PUBLICATIONS

Long Pan et al; Porous Lanthanide-Organic Frameworks: Synthesis, Characterization, and Unprecedented Gas Adsorption Properties; JACS, Feb. 12, 2003, vol. 125, No. 10, pp. 3062-3067.
Long Pan et al; Zn(tbip) (H2tbip+5-tert-Butyl Isopthalic Acid): A Highly Stable Guest-Free Microporous Metal Organic Framework with Unique Gas Separation Capability; JACS, Mar. 14, 2006, vol. 128, No. 13, pp. 4180-4181.
Jasra et al; Separation of Gases by Pressure Swing Adsorption; Separation Science and Technology; 1991; vol. 26; pp. 885-930.
Ma, Shengqian et al.; A Mesh-Adjustable Molecular Sieve for General Use in Gas Separation; Angewandte Chemie, International Edition, journal; 2007; pp. 2458-2462; vol. 46.

(Continued)

Primary Examiner—Frank M Lawrence
(74) *Attorney, Agent, or Firm*—Jason H. Foster; Kremblas, Foster, Phillips & Pollick

(57) **ABSTRACT**

A metal-organic framework-based mesh-adjustable molecular sieve (MAMS) exhibiting a temperature-dependent mesh size. The MAMS comprises a plurality of metal clusters bound with a plurality of amphiphilic ligands, each ligand comprising a hydrophobic moiety and a functionalized hydrophilic moiety, and wherein the metal clusters and amphiphilic ligand functionalized hydrophilic moieties form a metal cluster layer, the metal cluster layer forming at least one hydrophilic pore. On each side of the metal cluster layer, a plurality of associated amphiphilic ligand hydrophobic moieties cooperate with the metal cluster layer to form a tri-layer and a plurality of tri-layers are packed in a facing-spaced apart relationship to form at least one hydrophobic pore.
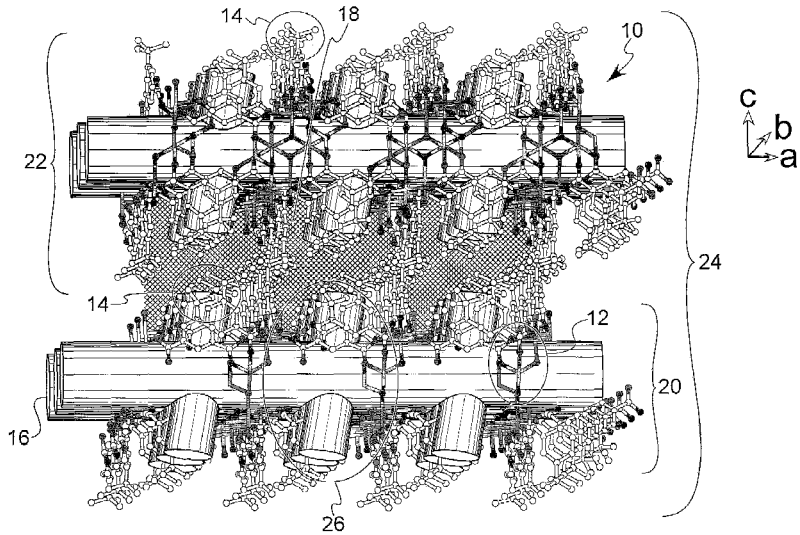
111 Claims, 23 Drawing Sheets