US005172332A

United States Patent [19]

Hungerford et al.

[11] Patent Number: 5,172,332

[45] Date of Patent: * Dec. 15, 1992

[54] AUTOMATIC FLUID SAMPLING AND MONITORING APPARATUS AND METHOD

[75] Inventors: **William G. Hungerford**, Medina; **Donald L. Miller; Carl Griffith**, both of Middleport; **Donald Kaiser**, Clarence Center, all of N.Y.

[73] Assignee: **American Sigma, Inc.**, Medina, N.Y.

[*] Notice: The portion of the term of this patent subsequent to Feb. 5, 2009 has been disclaimed.

[21] Appl. No.: **612,832**

[22] Filed: **Nov. 13, 1990**

Related U.S. Application Data

[63] Continuation-in-part of Ser. No. 455,981, Dec. 22, 1989.

[51] **Int. Cl.**[5] **G01N 1/00**

[52] **U.S. Cl.** **364/510**; 73/863.01

[58] **Field of Search** 364/510; 141/130, 94, 141/91, 89, 1; 73/863.03, 863.02, 863.01, 863, 864.34

[56] **References Cited**

U.S. PATENT DOCUMENTS

3,507,156	2/1968	Merrill, Jr.	73/863.02
3,727,464	4/1973	Rutkowski et al.	73/863.01
3,838,719	10/1974	Lederer	141/284
3,927,701	12/1975	Lederer	141/98
3,929,017	12/1975	Kowalski	364/510 X
3,996,786	12/1976	Mead et al.	73/53 X
4,022,059	5/1977	Schontzler et al.	141/130 X
4,221,127	9/1980	McClure	73/861
4,660,422	4/1987	Eads et al.	73/863.02
4,660,607	4/1987	Griffith et al.	141/1
4,697,462	10/1987	Daube, Jr. et al.	73/862.02 X
4,766,550	8/1988	Byers et al.	73/863.01 X
4,799,169	1/1989	Mims	73/510

OTHER PUBLICATIONS

"A Programmable Calculator Improves Automatic Sampling of Suspended Sediment" by Eads et al., application file wrapper for U.S. Pat. No. 4,660,422 issued Apr. 28, 1987.

Primary Examiner—Parshotam S. Lall
Assistant Examiner—S. A. Melnick
Attorney, Agent, or Firm—Irving Weiner; Pamela S. Burt; Joseph P. Carrier

[57] **ABSTRACT**

An automatic fluid sampling and monitoring apparatus provided as a unitary structure, and capable of collecting fluid samples at selected intervals, monitoring the level of a condition of the fluid at selected intervals, and collecting and storing sampling and fluid condition data for later retrieval. Sampling operations may be controlled on the basis of time and/or levels of a fluid condition being monitored. Where the apparatus also incorporates an internal flow measuring assembly, or is connected with an external flow meter, sampling operations may also be controlled on the basis of flow rate. The apparatus includes a self-contained microprocessor for automatically controlling sampling operations, calculating fluid condition levels on the basis of signals from a sensor, and storing data relating to sample collection and the fluid condition. Stored data can be called up on a display of the apparatus, or transferred via a portable transfer unit to an external output device, such as a printer, for producing a hard copy of the data.
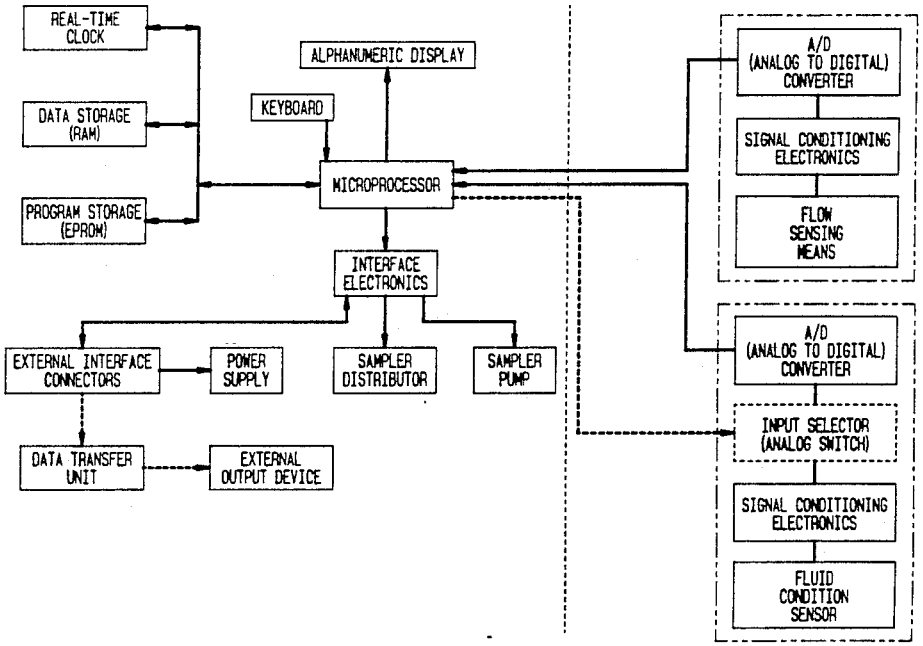
29 Claims, 23 Drawing Sheets