PLASTIC CLOSURE

Filed April 1, 1968 2 Sheets-Sheet 2

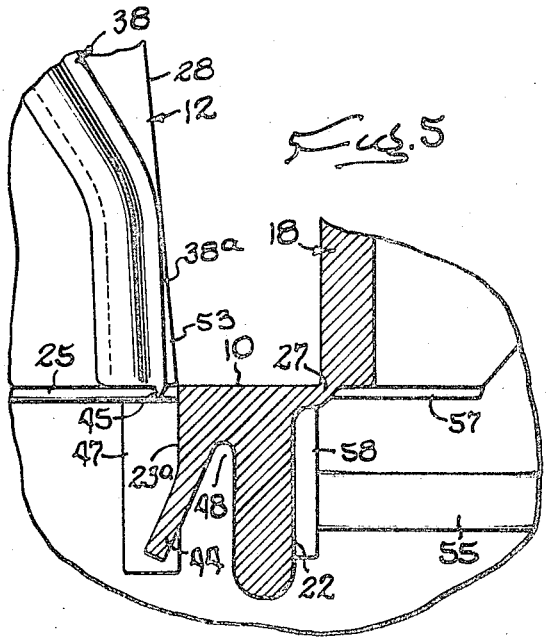

Fig. 5

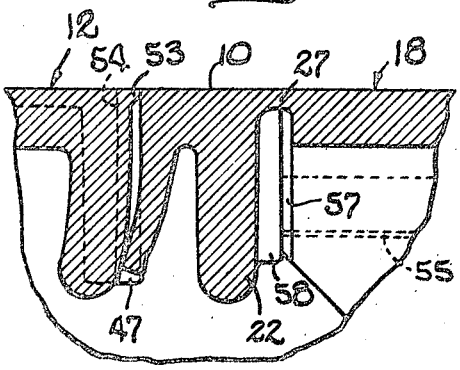

Fig. 6

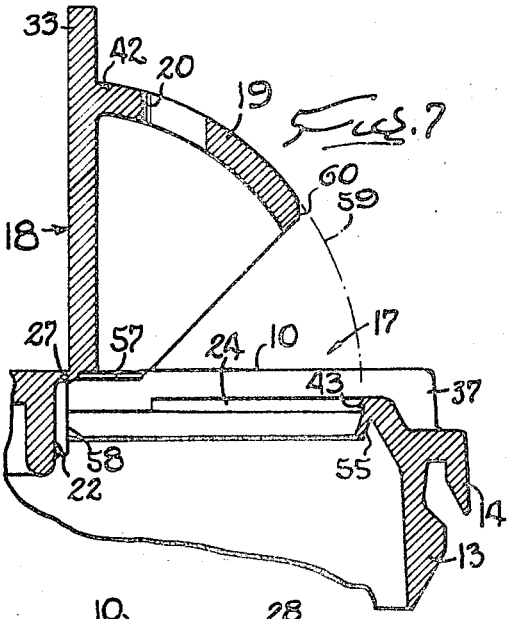

Fig. 7

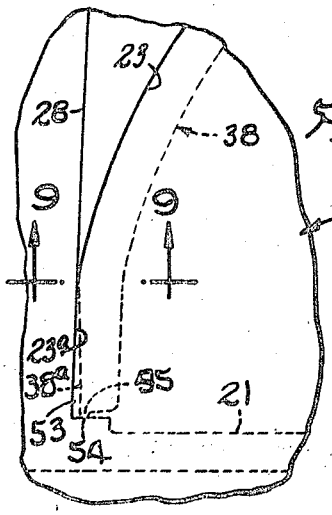

Fig. 8

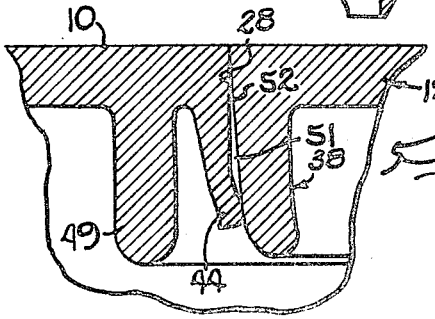

Fig. 9

INVENTOR
John A. Foster
by Wolfe, Hubbard, Voit & Osann
ATTORNEYS