US009460332B1

(12) **United States Patent**
Bussat

(10) **Patent No.: US 9,460,332 B1**
(45) **Date of Patent: Oct. 4, 2016**

(54) **CAPACITIVE FINGERPRINT SENSOR INCLUDING AN ELECTROSTATIC LENS**

(71) Applicant: **Apple Inc.**, Cupertino, CA (US)

(72) Inventor: **Jean-Marie Bussat**, Cupertino, CA (US)

(73) Assignee: **Apple Inc.**, Cupertino, CA (US)

(*) Notice: Subject to any disclaimer, the term of this patent is extended or adjusted under 35 U.S.C. 154(b) by 158 days.

(21) Appl. No.: **14/481,568**

(22) Filed: **Sep. 9, 2014**

Related U.S. Application Data

(60) Provisional application No. 61/875,564, filed on Sep. 9, 2013.

(51) **Int. Cl.**
G06K 9/00 (2006.01)
G06F 3/044 (2006.01)

(52) **U.S. Cl.**
CPC ***G06K 9/0002*** (2013.01); ***G06F 3/044*** (2013.01)

(58) **Field of Classification Search**
None
See application file for complete search history.

(56) **References Cited**

U.S. PATENT DOCUMENTS

3,876,942	A	4/1975	Koster
4,421,418	A	12/1983	Morishima
5,650,597	A	7/1997	Redmayne
5,731,222	A	3/1998	Malloy et al.
5,953,441	A	9/1999	Setlak
5,963,679	A	10/1999	Setlak
6,049,620	A	4/2000	Dickinson et al.
6,067,368	A	5/2000	Setlak et al.
6,088,471	A	7/2000	Setlak et al.
6,259,804	B1	7/2001	Setlak et al.
6,327,376	B1	12/2001	Harkin
6,400,359	B1	6/2002	Katabami
6,483,931	B2	11/2002	Kalnitsky et al.
6,522,773	B1	2/2003	Houdeau
6,628,812	B1	9/2003	Setlak
6,647,133	B1	11/2003	Morita et al.
6,734,655	B1	5/2004	Javanifard
6,737,329	B2	5/2004	Lepert et al.
6,815,657	B2	11/2004	Toyoshima et al.
6,882,338	B2	4/2005	Flowers
6,906,529	B2	6/2005	Blanchard
6,996,492	B1 *	2/2006	Testoni G01N 23/2252 378/137
7,042,317	B2	5/2006	Xiao et al.
7,194,113	B2	3/2007	Greschitz et al.
7,202,764	B2	4/2007	Deligianni et al.
7,227,213	B2	6/2007	Mastromatteo et al.
7,236,765	B2	6/2007	Bonicatto et al.

(Continued)

FOREIGN PATENT DOCUMENTS

AU	2013100571	5/2013
CN	1164075	11/1997

(Continued)

OTHER PUBLICATIONS

Motorola User Guide, Motorola Atrix™ 4G (MB860), Manual No. 68XXXXX468-A, Motorola Mobility Inc., 2011, 90 pages.

(Continued)

Primary Examiner — Aaron W Carter
(74) *Attorney, Agent, or Firm* — Brownstein Hyatt Farber Schreck, LLP

(57) **ABSTRACT**

A capacitive fingerprint sensor, including: a dielectric structure having a contact surface and a sensor surface; an array of capacitive sensing elements held on or near the sensor surface of the dielectric structure; and an electrostatic lens formed within the dielectric structure.
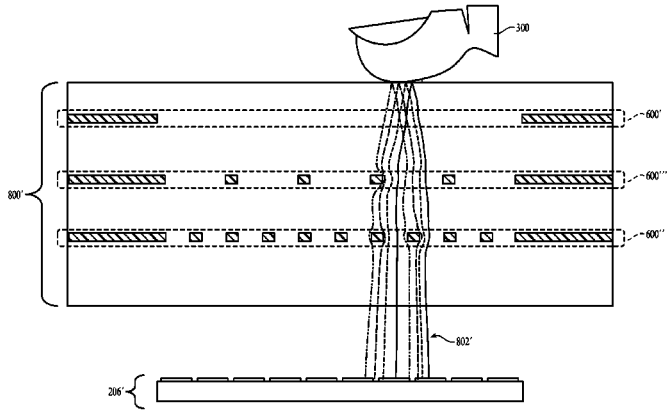
31 Claims, 19 Drawing Sheets