CORNEAL PLASTIC CONTACT LENS WITH COLORED PERIPHERAL ZONE

Filed Nov. 3, 1966

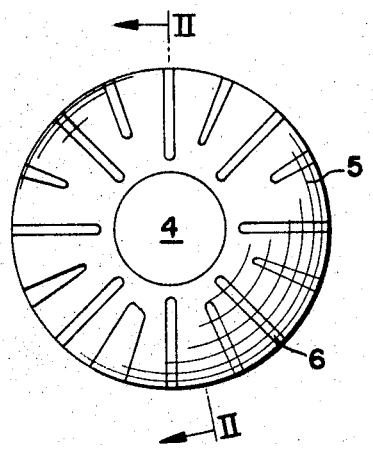

FIG.1

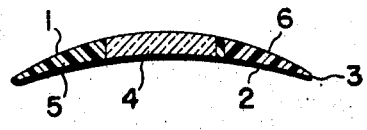

FIG.2

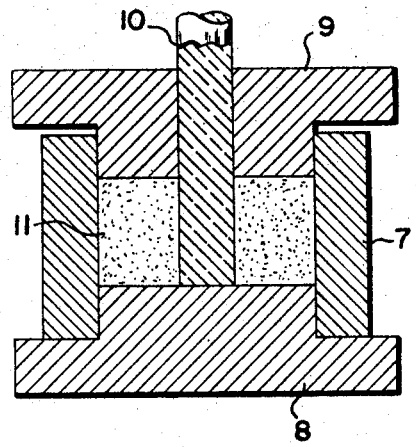

FIG.3

INVENTOR.
ROBERT SIEGEL
BY: Kelman and Berman

AGENTS