April 17, 1951 R. B. NOTTINGHAM 2,549,632

READER FOR THE BLIND

Filed Oct. 31, 1947 2 Sheets-Sheet 1

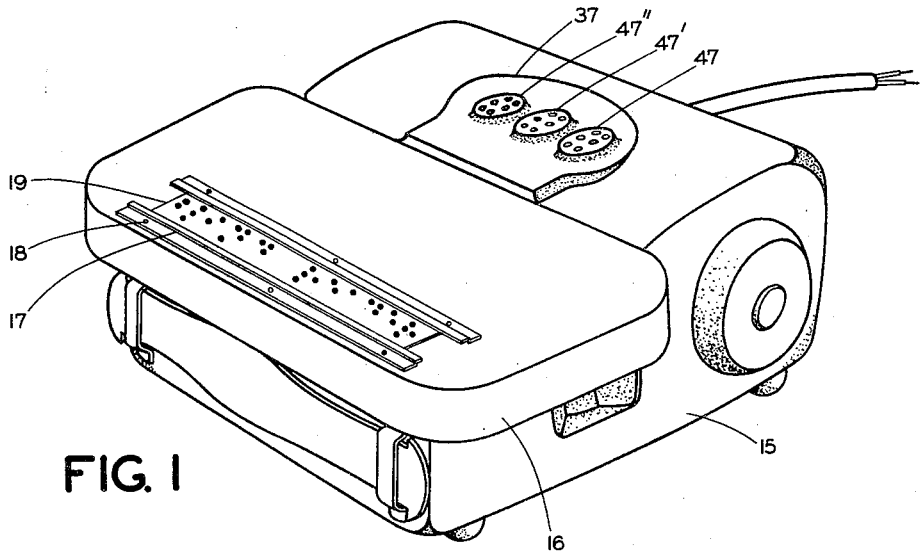

FIG. 1

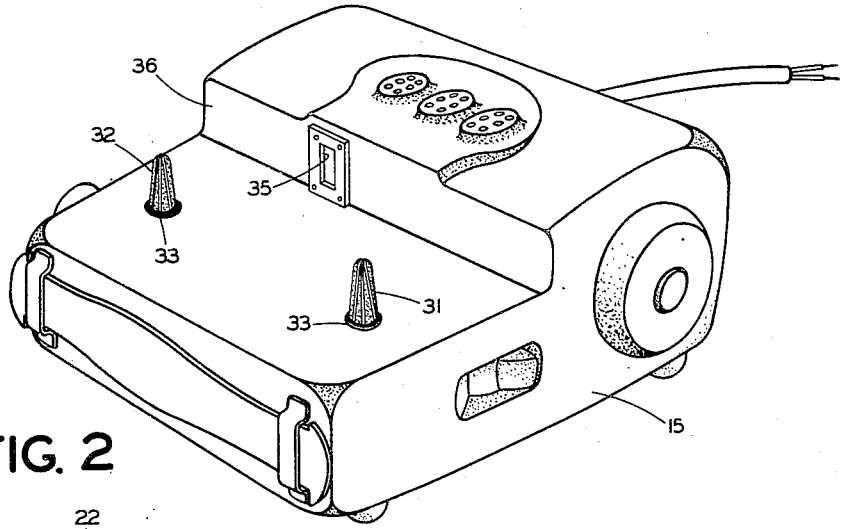

FIG. 2

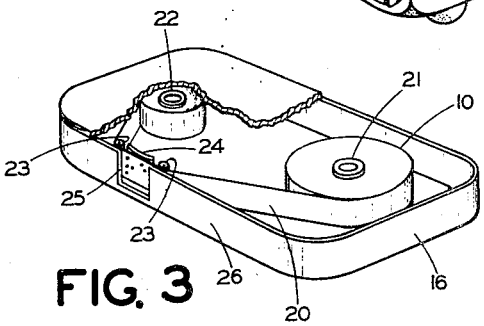

FIG. 3

INVENTOR.
Ralph B. Nottingham
BY
Ellis J. Hyde
ATTORNEY