US009637032B2

(12) **United States Patent**
Salenbien et al.

(10) **Patent No.: US 9,637,032 B2**
(45) **Date of Patent: May 2, 2017**

(54) **CENTER ARMREST LOCK**

(71) Applicant: **FORD GLOBAL TECHNOLOGIES, LLC**, Dearborn, MI (US)

(72) Inventors: **Nicholas Salenbien**, Dundee, MI (US); **Thomas J. Susko**, Saint Clair Shores, MI (US); **Macit Aktas**, Windsor (CA)

(73) Assignee: **Ford Global Technologies, LLC**, Dearborn, MI (US)

(*) Notice: Subject to any disclaimer, the term of this patent is extended or adjusted under 35 U.S.C. 154(b) by 48 days.

(21) Appl. No.: **14/681,345**

(22) Filed: **Apr. 8, 2015**

(65) **Prior Publication Data**

US 2016/0297334 A1 Oct. 13, 2016

(51) **Int. Cl.**
B60N 2/46 (2006.01)

(52) **U.S. Cl.**
CPC ***B60N 2/4613*** (2013.01)

(58) **Field of Classification Search**
CPC B60N 2/4606; B60N 2/4613; B60N 2/462; B60N 2/4633
USPC 297/113, 115, 117, 378.13, 411.3, 411.32
See application file for complete search history.

(56) **References Cited**

U.S. PATENT DOCUMENTS

3,168,346	A	2/1965	Rei, Jr.	
4,579,384	A	4/1986	Sharod	
4,904,003	A *	2/1990	Yamazaki	B60N 2/366 292/126
5,100,202	A	3/1992	Hughes	
5,476,307	A	12/1995	Whalen	
5,658,043	A	8/1997	Davidson	
5,873,633	A	2/1999	Lang et al.	
6,742,845	B2	6/2004	Nock	
9,290,117	B2 *	3/2016	Goodhall	B60N 2/4613
2008/0129101	A1	6/2008	Park	
2010/0244502	A1	9/2010	Andersson et al.	
2014/0125107	A1 *	5/2014	Cha	B60N 2/4613 297/411.3
2014/0319868	A1 *	10/2014	von Rothkirch und Panthen	B60N 2/4633 296/24.34

FOREIGN PATENT DOCUMENTS

DE	3322511	A1 *	1/1985	B60N 2/4613
DE	3825781	A1	2/1990	
DE	10120604	C1 *	10/2002	B60N 2/4613
DE	102008030275	A1 *	12/2009	B60N 2/4613

(Continued)

OTHER PUBLICATIONS

Machine Translation of DE 102014101996A1, Jul. 21, 2016. www.worldwide.espacenet.com.*

(Continued)

Primary Examiner — Ryan Kwiecinski
(74) *Attorney, Agent, or Firm* — Vichit Chea; King & Schickli, PLLC

(57) **ABSTRACT**

A locking assembly for a vehicle armrest includes a pivoting stopping member disposed below an armrest body and a catch wire disposed on a seat back frame member. A retractable stop pin maintains engagement of the pivoting stopping member and the catch wire. A release is operatively connected to the retractable stop pin, which may be urged into engagement with the pivoting stopping member by a spring. Armrest and seat assemblies including the locking assembly are provided.
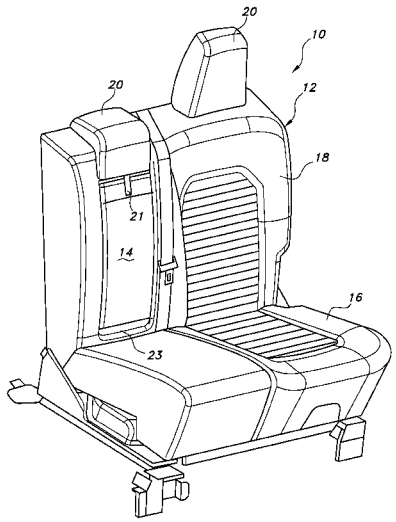
10 Claims, 6 Drawing Sheets